AMP+ CHARGING INLETS & ACTUATORS

Quick, reliable, and safe energy transfer from the grid to the car

PRODUCT CATALOG

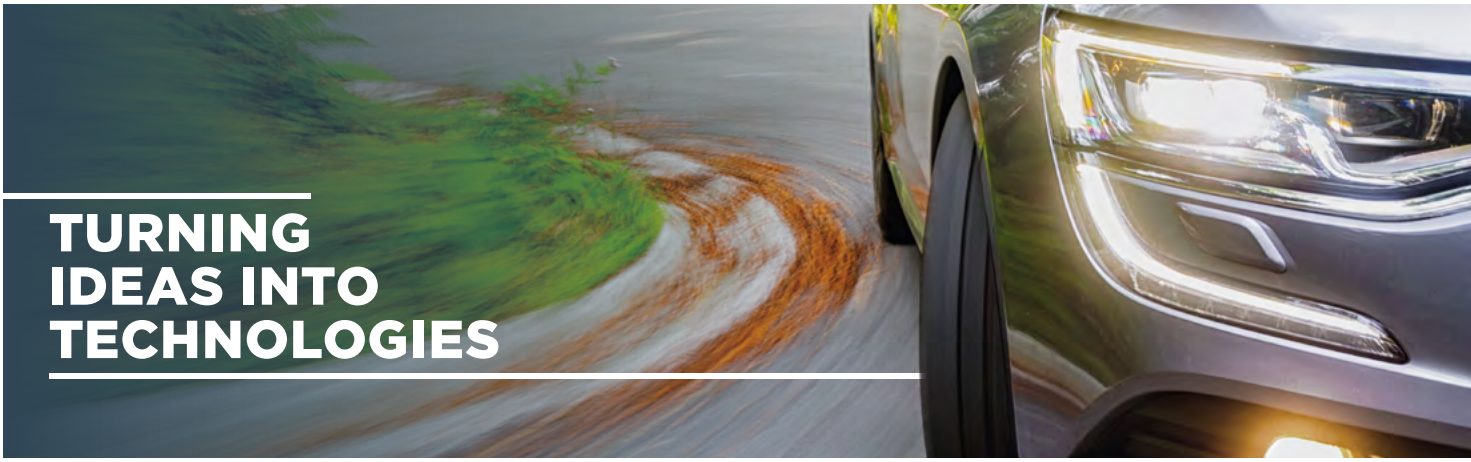

TURNING IDEAS INTO TECHNOLOGIES

TE Connectivity's E-mobility Solutions Open a Pathway to a Greener, More Sustainable Future

There's never been a more exciting time to be in the automotive industry! We're accelerating toward a new reality whereby the number of internal-combustion-engine cars on our roads will eventually be surpassed by electric vehicles. Automakers are responding by rewriting their business models and investing hundreds of billions of dollars into EV R&D.

TE Connectivity (TE) has led the electrification and sustainability charge since its inception, with clear-cut expertise in electrical interface design. Our products cover the complete spectrum of EV energy transfer and meet the increased power ratings and higher thermal and vibration requirements that tomorrow's electric, hybrid, and plug-in-hybrid vehicles demand.

Our vast E-mobility portfolio addresses four major technological application areas:

E-drive Systems

Our high-current interconnection systems are designed to move energy efficiently and reliably from the charging system to the battery, and from the battery to the electric motor.

Auxiliary Systems

Our physically smaller auxiliary interconnection systems are designed for lower-current applications, such as cabin heating and cooling systems, while reducing weight and bulk.

Charging Path

As batteries get bigger and EVs travel farther, the need for fast high-powered charging increases. Our charging inlets transfer energy quickly, reliably, and safely from the grid to the car.

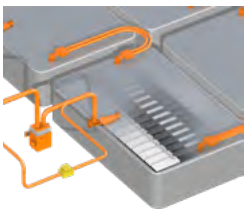

Energy Storage

TE offers a full catalog of battery and fuel cell interconnection and protection solutions that increase safety, time to recharge, and driving range.

AMP+ CHARGING INLETS & ACTUATORS

TE's AMP+ charging inlets and actuators are designed to meet the challenges of tomorrow's electric, hybrid, and plug-in hybrid vehicles and can be modified for virtually any transportation need.

Our portfolio supports all common international interface standards, including AC, DC, and combined charging system (CCS) variants in multiple cable exit directions and temperature sensing options.

Our newest family of inlets, the CI 500 Series, can transfer 500 kilowatts at currents of up to 500 continuous amps, which represents the highest load state available for EVs today.

In addition to providing fully integrated inlets, TE offers locking actuators as stand-alone devices. An actuator is a safety device that physically locks the charging plug into the inlet while the vehicle is charging, which prevents accidental or forced removal.

Designed for increased performance demands and durability, TE's charging inlets are scalable to fit all electrical and electronic vehicle architectures, from discrete point-to-point operation or via distributed intelligent control.

AMP+ CHARGING INLETS – PORTFOLIO AT A GLANCE

		Region	AC Current Max	AC Voltage Max	DC Current Max	DC Voltage Max	Charging Power Max
Charging Inlet 500 Series	 CI 500 CCS Type 1	Americas, Korea	48 A	250 V	500 A*/ 335 A	1000 V	12 kW (AC) 500 kW (DC)
	 CI 500 CCS Type 2	Europe, ROW	32 A	480 V/ 250 V	500 A*/ 335 A	1000 V	22 kW (AC) 500 kW (DC)
	 CI 500 Japan DC	Japan	–	–	500 A*/ 335 A	1000 V	500 kW (DC)
Charging Inlet 250 Series	 CI 250 Type GB DC	China	–	–	250 A	1000 V	250 kW (DC)
Charging Inlet 200 Series	 CI 200 CCS Type 1	Americas, Korea	48 A	250V	200 A	1000 V	12 kW (AC) 200 kW (DC)
	 CI 200 CCS Type 2	Europe, ROW	32 A	480 V/ 250 V	250A	1000 V	22 kW (AC) 250 kW (DC)
Charging Inlet 32 Series	 CI 32 Type 1	Americas, Korea, Japan	48 A	250 V	–	–	12 kW (AC)
	 CI 32 Type 2	Europe, ROW	32 A	480 V/ 250 V	–	–	22 kW (AC)
	 CI 32 Type GB AC	China	32 A	440 V/ 250 V	–	–	22 kW (AC)

* 500 amps of current requires active cooling at the charging station and thermal sensing in the inlet.

AMP+ CHARGING INLET ACTUATORS

In addition to fully integrated charging inlets, TE manufactures and markets a suite of actuators that lock the charging station connector plug into the inlet, preventing the plug from being removed from the vehicle accidentally or by force during a charging cycle. The actuator is mounted to the inlet and has a locking pin that engages to hold the connector in place as a safety mechanism, confirming that every charging cycle is conducted reliably and securely.

TE's actuators are fortified to work in harsh automotive environments, conforming to the latest IEC 62196 and GB/T 20234 standards. They are used in a variety of electric vehicles – such as scooters, motorcycles, trucks, buses, ferries, and aircraft – to increase safety levels.

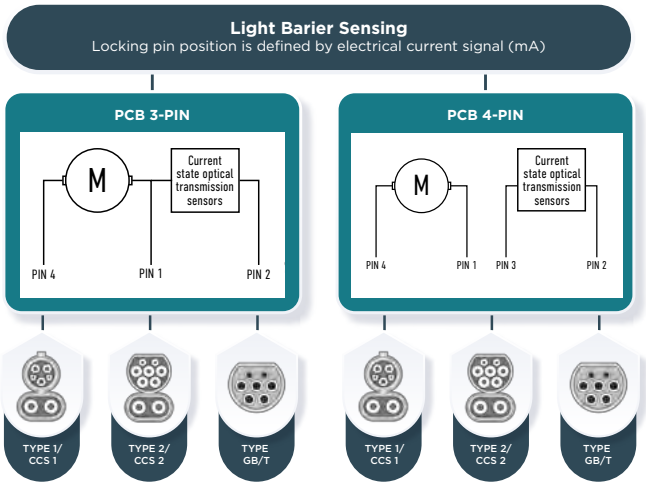

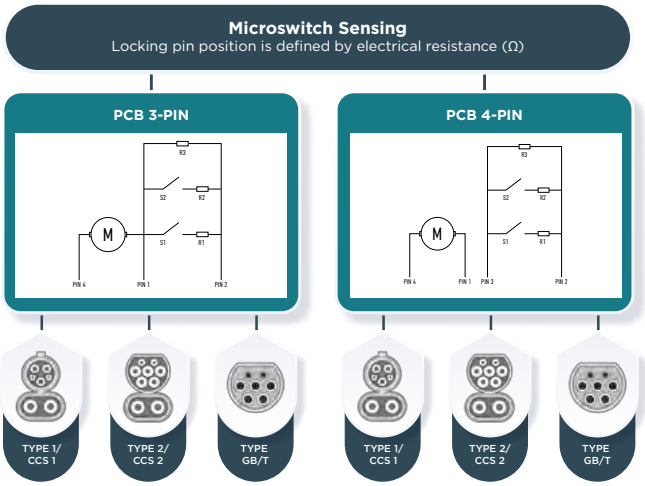

AMP+ CHARGING INLET ACTUATORS: KEY BENEFITS

- Locks the charging plug in place, preventing unintended or premature disconnection and providing greater safety
- Available as a stand-alone product
- Compliant with IEC 62196 and GB/T 20234 standards
- Lifetime reliability for up to 80,000 cycles
- 12 configurations that support "plug and play" integration

AMP+ CI 500 Series Charging Inlet – CCS Type 1

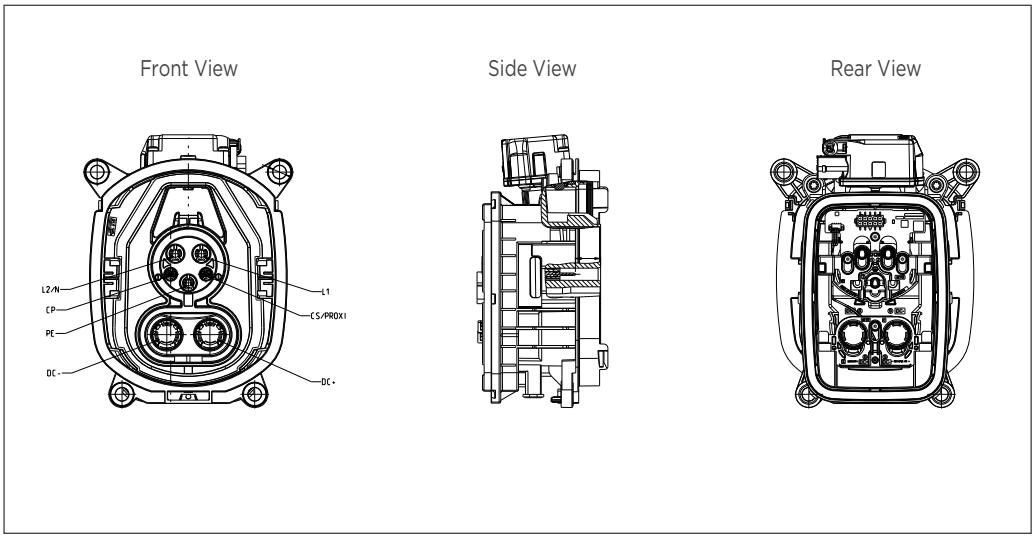

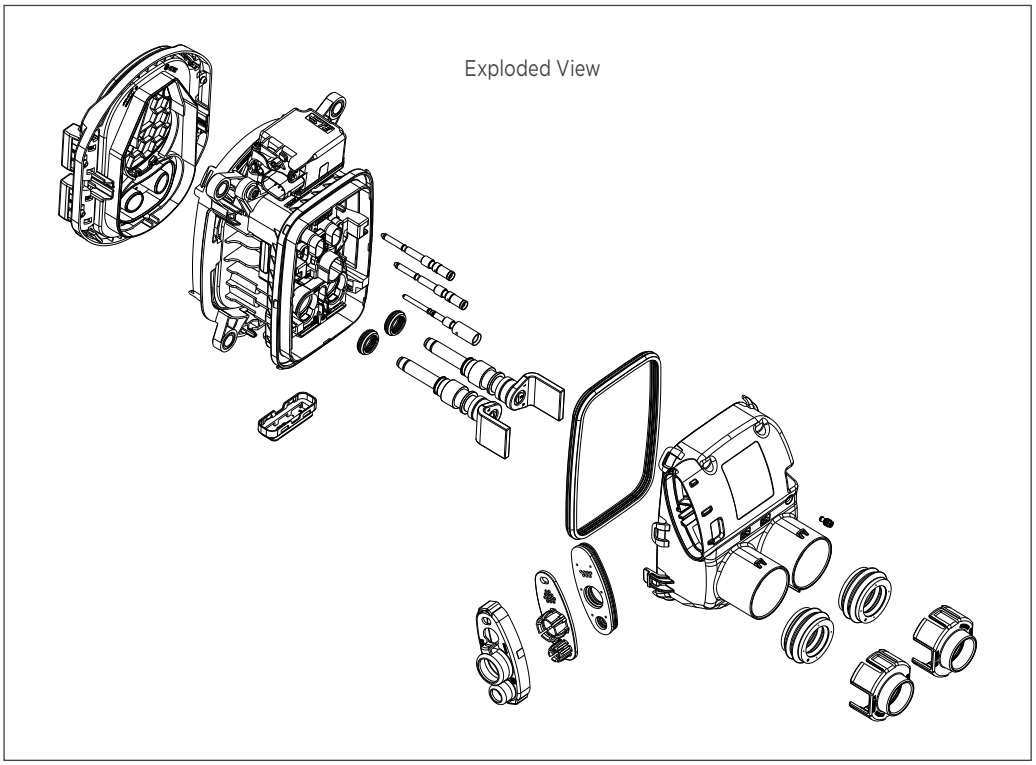

Drawing 2386777

Technical Features

Terminal Size/System:
Round contact

AC Contacts:
6 mm^2 wire size

DC Contacts:
95 mm^2 wire size

Voltage Rating AC:
250 VAC

Voltage Rating DC:
1000 VDC

Current Capacity AC:
48 A

Current Capacity DC:
500 A (cooled infrastructure);
335 A (uncooled infrastructure)

IP Rating:
IP55 (front, mated)
IP67 (rear)

Cable Outlet:
90°/90° left
90°/90° right
90°/180° right
180°/180°

LED Charging Indicator:
No

Finger Protection:
Yes

Vibration Level:
SG-2 (LV 215-1)

Application Specification:
114-94710 (90°/90°)
114-94711 (90°/180°)
114-94712 (180°/180°)

Product Specification:
108-94842

Drawing:
2386777

Standards:
IEC 62196

Optional Accessories:
- Flap assembly: 2337030
- AC/DC dust cover with wire strap: 2411946, 2331969, 2333944

* Drawing number is not the order number.

Technical Features

Terminal Size/System:
Round contact

AC Contacts:
6 mm^2 wire size

DC Contacts:
95 mm^2 wire size

Voltage Rating AC:
480 VAC

Voltage Rating DC:
1000 VDC

Current Capacity AC:
32 A

Current Capacity DC:
500 A (cooled infrastructure);
335 A (uncooled infrastructure)

IP Rating:
IP55 (front, mated)
IP67 (rear)

Cable Outlet:
90°/90° left
90°/90° right
90°/180° right
180°/180°

LED Charging Indicator:
No

Finger Protection:
Yes

Vibration Level:
SG-2 (LV 215-1)

Application Specification:
114-94727 (90°/90°)
114-94728 (90°/180°)
114-94729 (180°/180°)

Product Specification:
108-94843

Drawing:
2386778

Standards:
IEC 62196

Optional Accessories:
- Flap assembly: 2337030
- AC/DC dust cover with wire strap: 2411949, 2331969,, 2333944

AMP+ CI 500 Series Charging Inlet – CCS Type 2

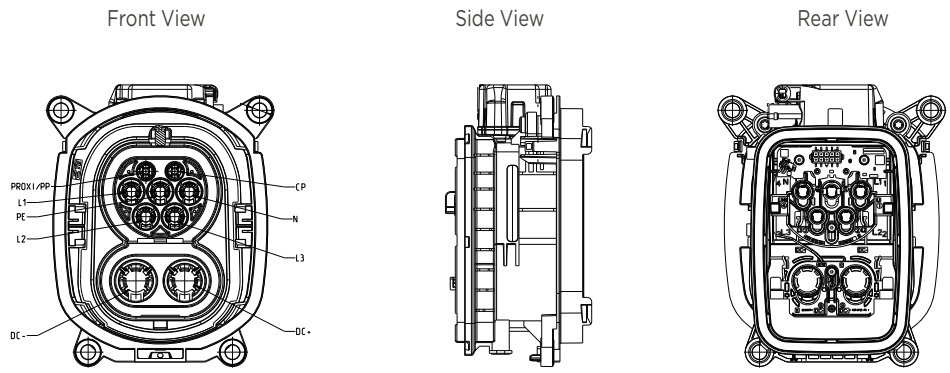

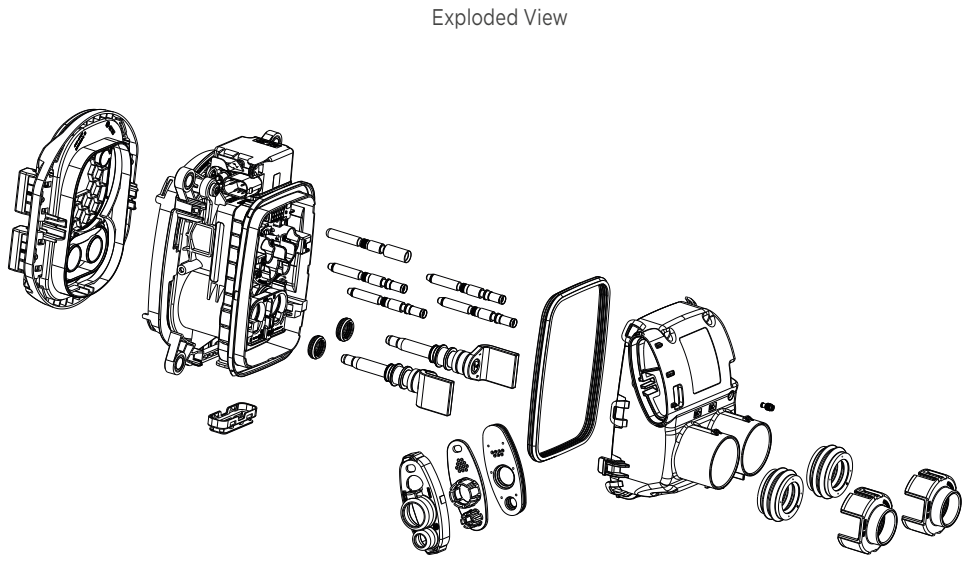

Drawing 2386778

* Drawing number is not the order number.

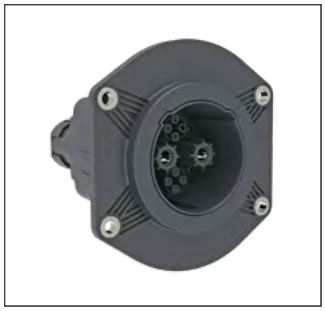

AMP+ CI 500 Series Charging Inlet – Type Japan DC

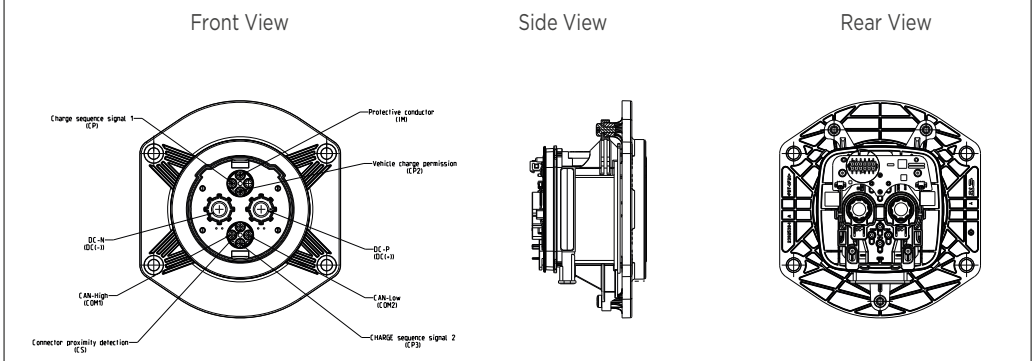

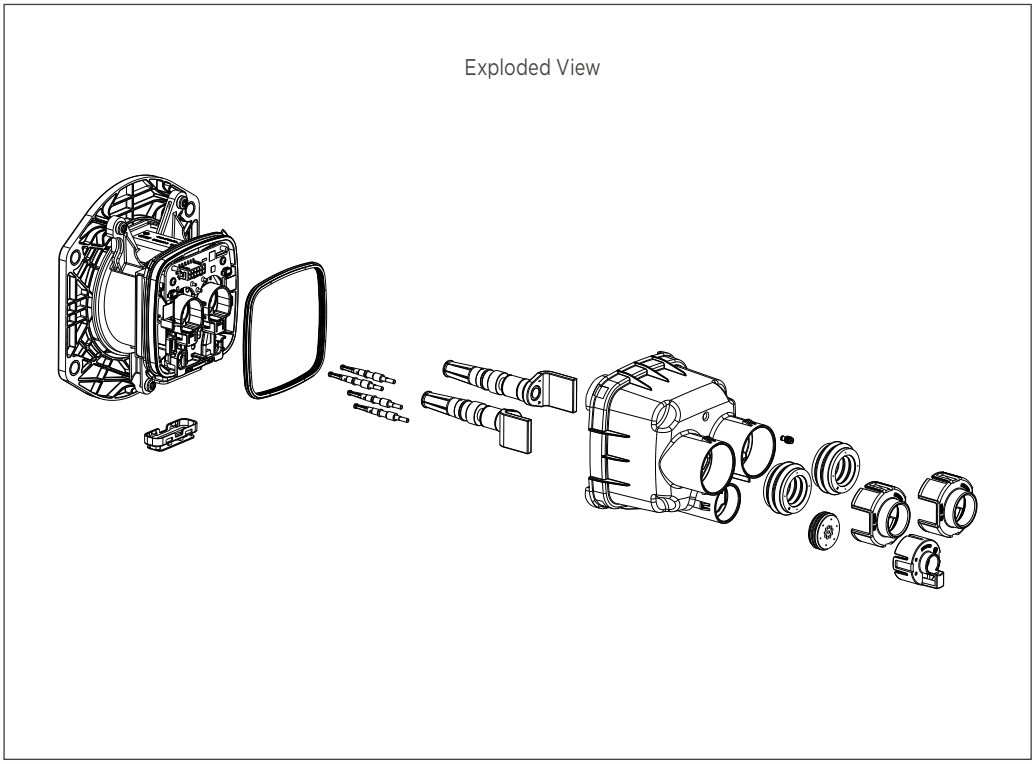

Drawing 2386779

Technical Features

Terminal Size/System:
Socket contact

DC Contacts:
95 mm^2 wire size

Voltage Rating DC:
1000 VDC

Current Capacity DC:
500 A (cooled infrastructure);
335 A (uncooled infrastructure)

IP Rating:
IP55 (front, mated)
IP67 (rear)

Cable Outlet:
180°

LED Charging Indicator:
No

Finger Protection:
Yes

Vibration Level:
SG-2 (LV 215-1)

Application Specification:
114-94730

Product Specification:
108-94844

Drawing:
2386779

Standards:
IEC 62196

* Drawing number is not the order number.

Technical Features

Poles:
2p + 7p

Terminal Size/System:
Round contact

DC Contacts:
16 mm^2 to 95 mm^2 wire size

Voltage Rating DC:
1000 VDC max.

Current Carrying Capacity:
80 A to 600 A

IP Rating (mated):
IPX7 immersion with pressure
IPX9K on interface, flap open

Cable Outlet:
180°/180°

LED Charging Indicator:
No

Assembly Type:
Rear

Temperature Sensor:
2 Pcs NTC for DC+/DC
R25°C = 10 kΩ ±1%
B25/50=3950k ±1%

Application Specification:
114-160029

Product Specification:
108-160060

Drawing:
2397227

Standards:
GB/T 20234.1
GB/T 20234.3

Optional Accessories:
- Dust cover with wire strap: 2395348-1

AMP+ CI 250 Series Charging Inlet – Type GB DC

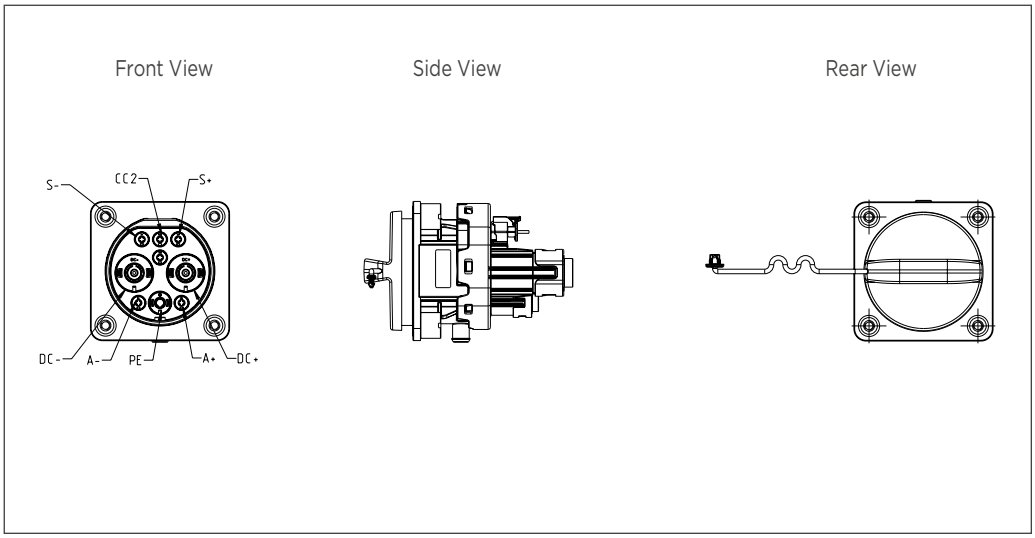

Drawing 2397227

Item	Installation Type	Cable Exit Direction	Current	Wire Size
1	Rear	180°	80 A	16 mm^2
2			100 A	25 mm^2
3			150 A	35 mm^2
4			200 A	50 mm^2
5			250 A	70 mm^2
6			250-600 A	95 mm^2

Solutions available for copper wire, aluminum wire, and aluminum row.

* Drawing number is not the order number.

AMP+ CI 200 Series Charging Inlet – CCS Type 1

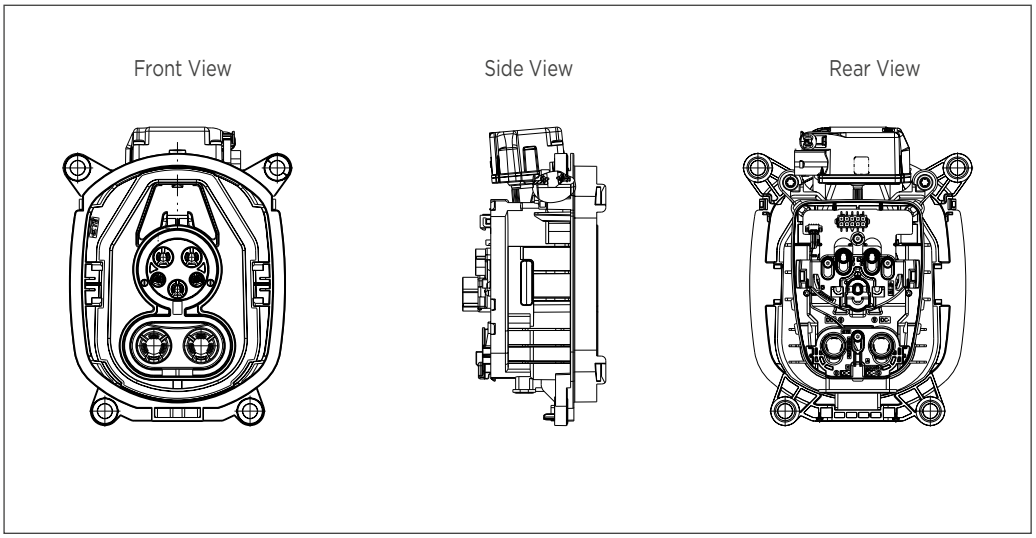

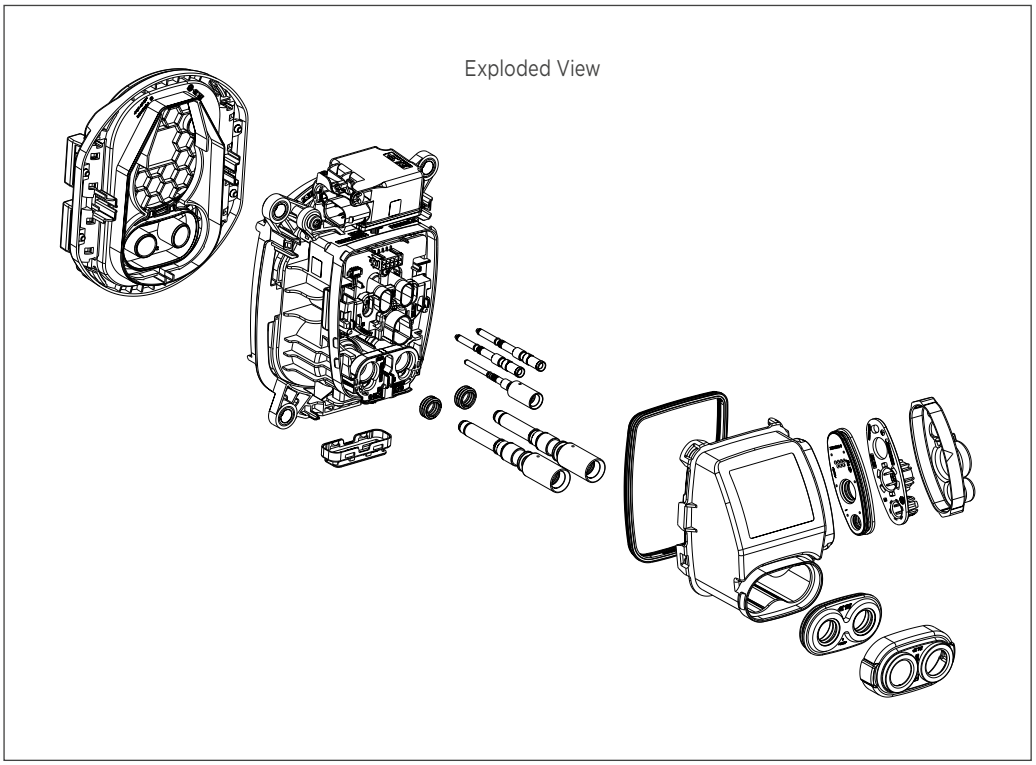

Drawing 2337006

Technical Features

Terminal Size/System:
Round contact

AC Contacts:
6 mm^2 wire size

DC Contacts:
50 mm^2 wire size

Voltage Rating AC:
250 VAC

Voltage Raging DC:
600 VDC

Current Capacity AC:
32 A

Current Capacity DC:
200 A

IP Rating:
IP55 (front, mated)
IP67 (rear)

Cable Outlet:
90°/90° left
90°/90° right
90°/180° left
90°/180° right
180°/180°

LED Charging Indicator:
No

Finger Protection:
Yes

Vibration Level:
SG-2 (LV 215-1)

Application Specification:
114-94648 (90°/90°)
114-94649 (90°/180°)
114-94762 (180°/180°)

Product Specification:
108-94777

Drawing:
2337006

Standards:
IEC 62196

Optional Accessories:
- Flap assembly: 2337030
- AC/DC dust cover with wire strap: 2411946, 2331969, 2333944

* Drawing number is not the order number.

AMP+ CI 200 Series Charging Inlet – CCS Type 2

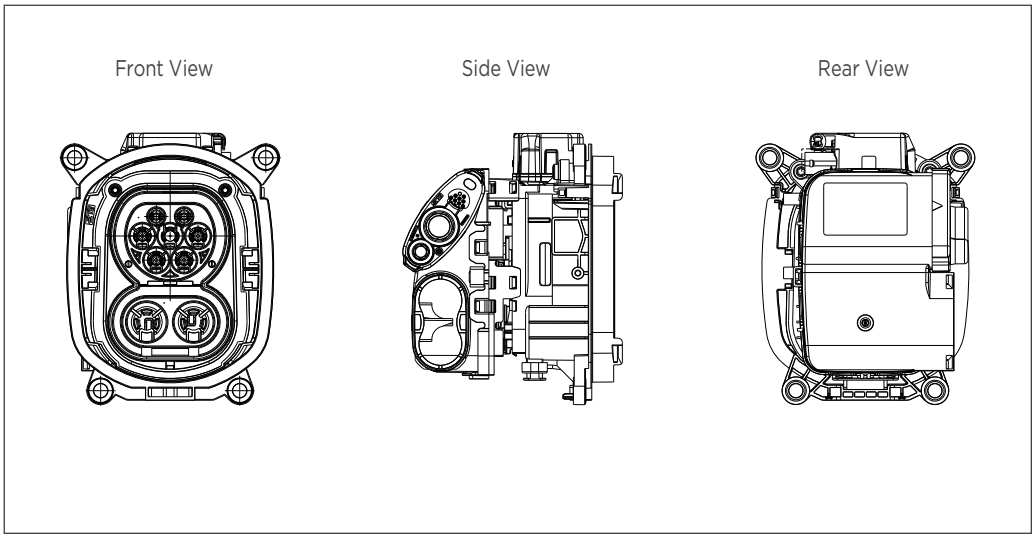

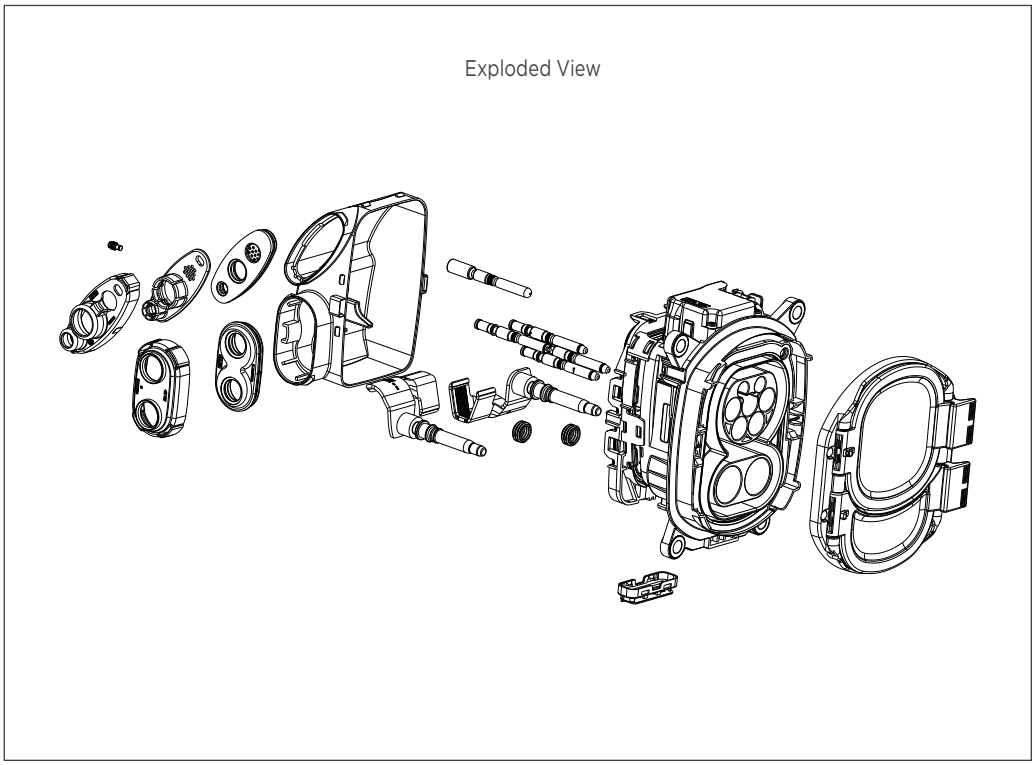

Drawing 2337016

Technical Features

Terminal Size/System:
Round contact

AC Contacts:
6 mm^2 wire size

DC Contacts:
50 mm^2 wire size

Voltage Rating AC:
480 VAC

Voltage Raging DC:
1,000 VDC

Current Capacity AC:
32 A

Current Capacity DC:
200 A

IP Rating:
IP55 (front, mated)
IP67 (rear)

Cable Outlet:
90°/90° left
90°/90° right
90°/180° left
90°/180° right
180°/180°

LED Charging Indicator:
No

Finger Protection:
Yes

Vibration Level:
SG-2 (LV 215-1)

Application Specification:
114-94650 (90°/90°)
114-94651 (90°/180°)
114-94763 (180°/180°)

Product Specification:
108-94778

Drawing:
2337016

Standards:
IEC 62196

Optional Accessories:
- Flap assembly: 2337030
- AC/DC dust cover with wire strap: 2411949, 2331969, 2333944

* Drawing number is not the order number.

AMP+ CI 200 Series Charging Inlet – CCS Type 2 with LED Indicator

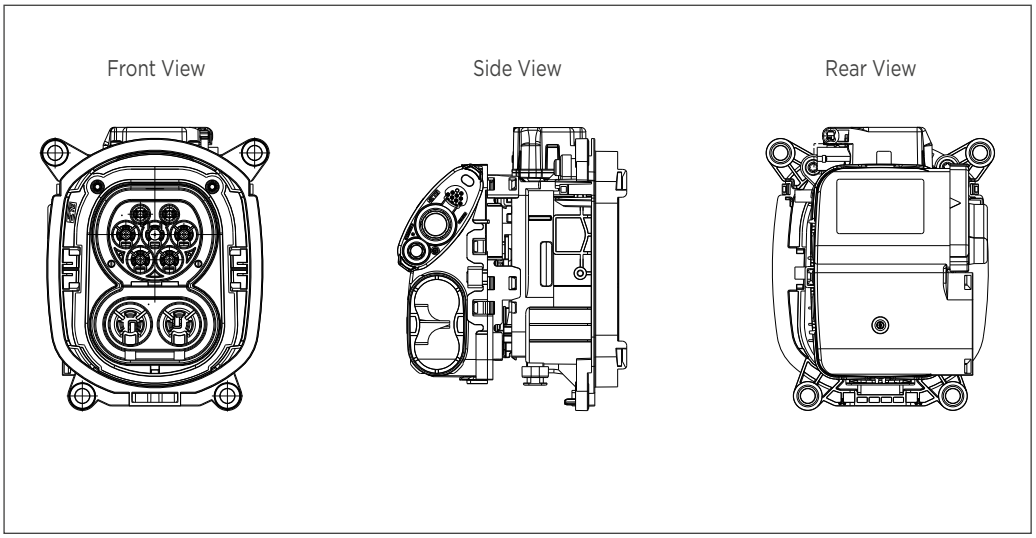

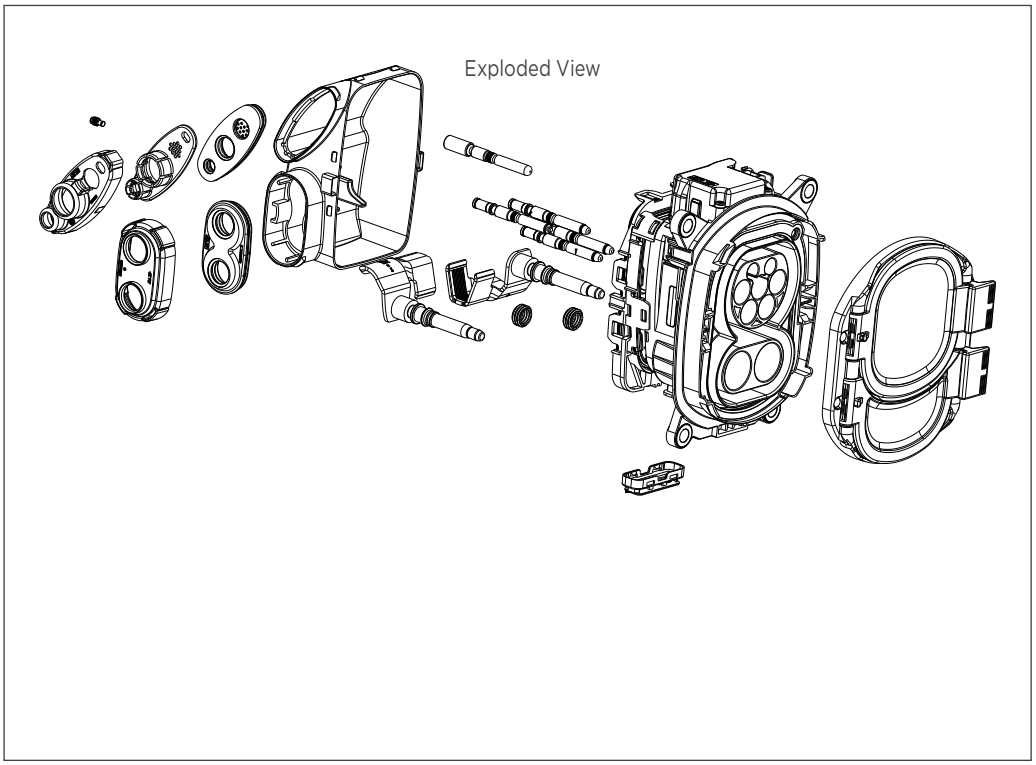

Drawing 2407175

Technical Features

Terminal Size/System:
Round contact

AC Contacts:
6 mm^2 wire size

DC Contacts:
50 / 70 mm^2 wire size

Voltage Rating AC:
480 VAC

Voltage Raging DC:
1,000 VDC

Current Capacity AC:
32 A

Current Capacity DC:
200 / 250 A

IP Rating:
IP55 (front, mated)
IP67 (rear)

Cable Outlet:
90°/90° left
90°/90° right
180°/180°

LED Charging Indicator:
Yes

Finger Protection:
Yes

Vibration Level:
SG-2 (LV 215-1)

Application Specification:
114-94819 (90°/90°)
114-94820 (180°/180°)

Product Specification:
108-94868

Drawing:
2407175

Standards:
IEC 62196

Optional Accessories:
- Flap assembly: 2337030
- AC/DC dust cover with wire strap: 2411946, 2331969, 2333944

* Drawing number is not the order number.

AMP+ CI 32ED Series Charging Inlet – Type 1 with LED Indicator

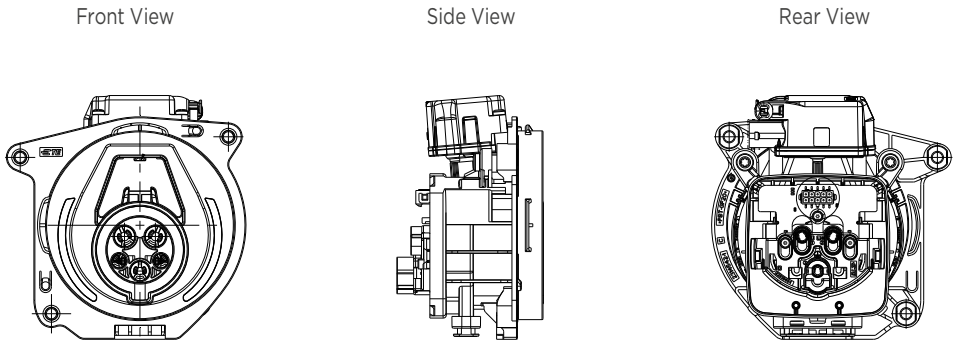

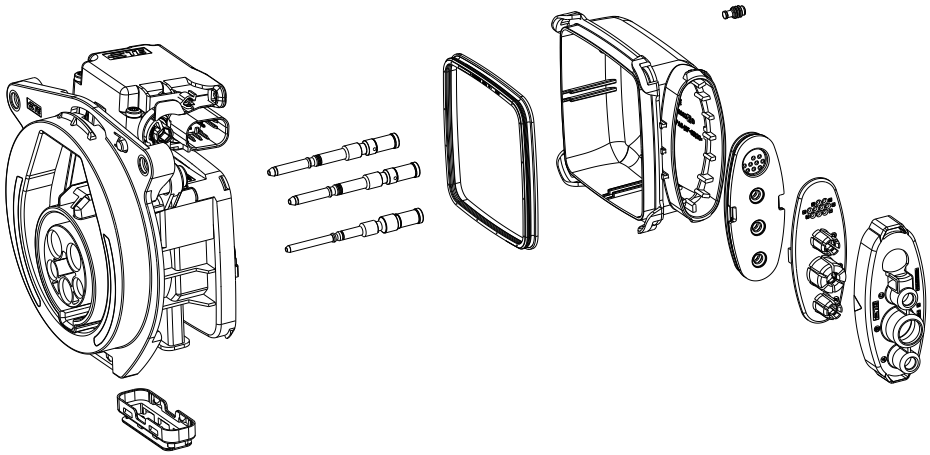

Drawing 2368475

Technical Features

Terminal Size/System:
Round contact

AC Contacts:
6 mm^2 wire size

Voltage Rating AC:
250 VAC

Current Capacity AC:
32A

IP Rating:
IP55 (front, mated)
IP67 (rear)

Cable Outlet:
90° left/right/down

LED Charging Indicator:
Yes

Finger Protection:
Yes

Vibration Level:
SG-2 (LV 215-1)

Application Specification:
114-94652

Product Specification:
108-94779

Drawing:
2368475

Standards:
IEC 62196

Optional Accessories:
- AC dust cover with wire strap: 2411949, 2333944

* Drawing number is not the order number.

AMP+ CI 32ED Series Charging Inlet – Type 2 with LED Indicator

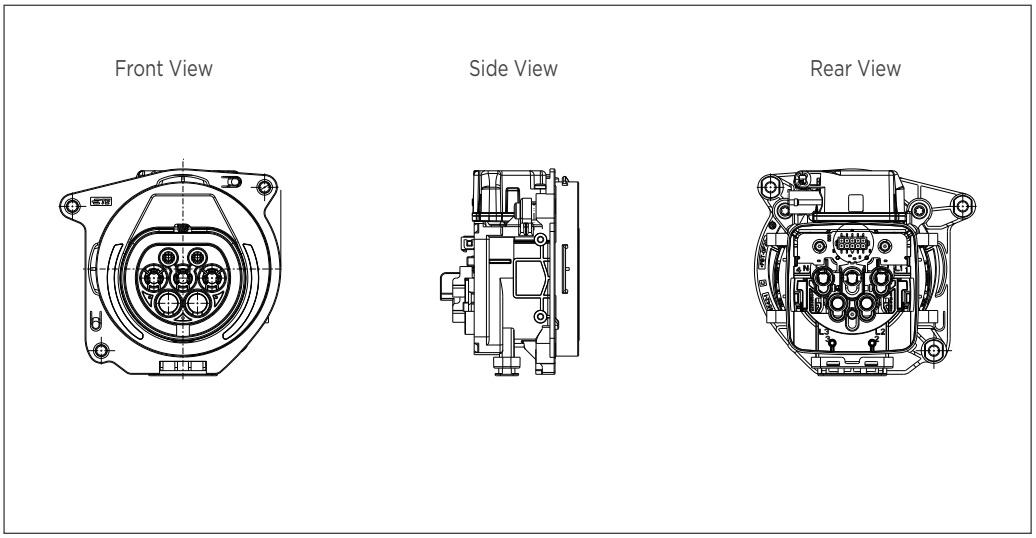

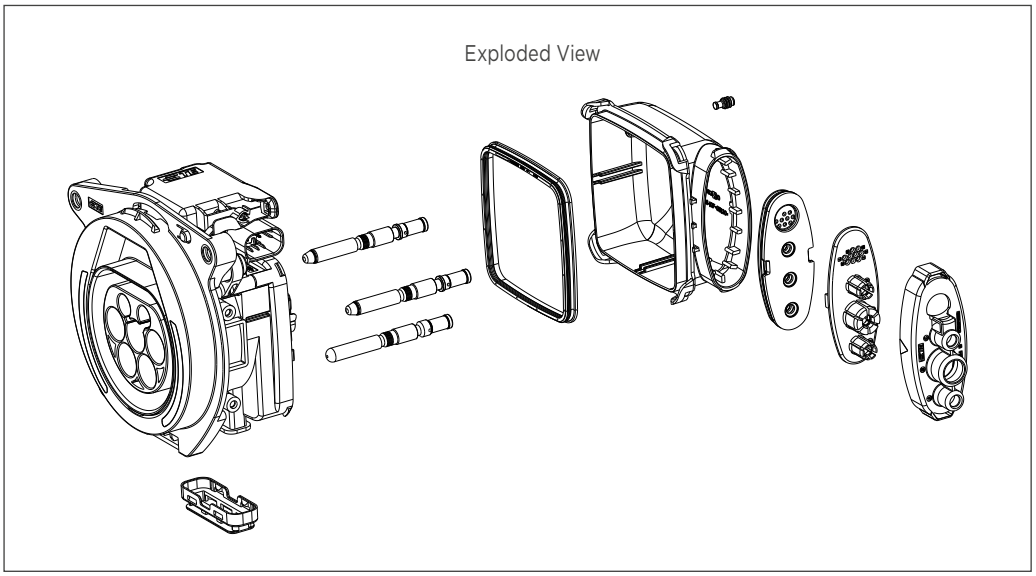

One-phase charging option

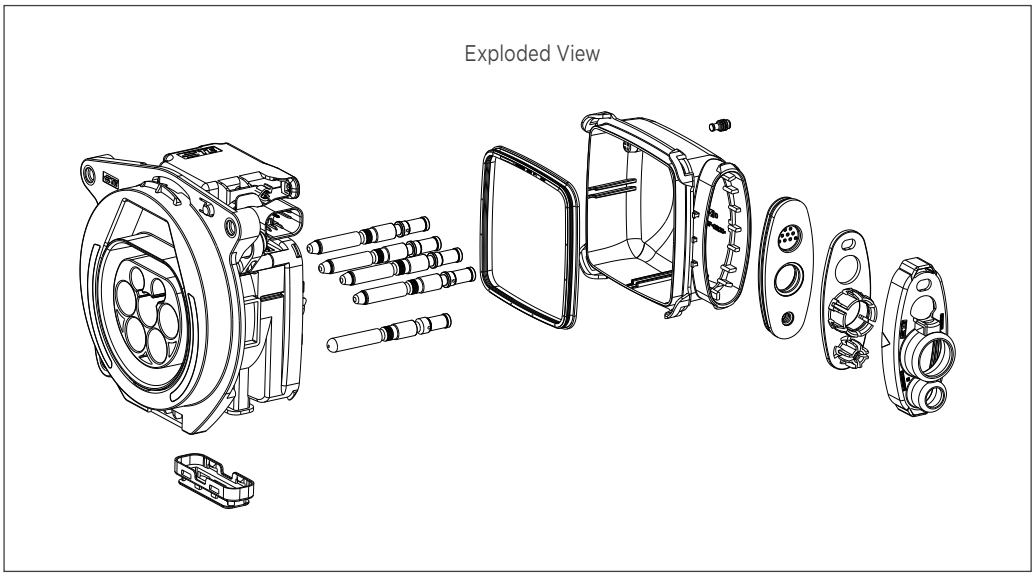

Three-phase charging option

Technical Features

Terminal Size/System:
Round contact

AC Contacts:
6 mm^2 wire size

Voltage Rating AC:
480 VAC

Current Capacity AC:
32 A

IP Rating:
IP55 (front, mated)
IP67 (rear)

Cable Outlet:
90° left/right/down

LED Charging Indicator:
Yes

Finger Protection:
Yes

Vibration Level:
SG-2 (LV 215-1)

Application Specification:
114-94653

Product Specification:
108-94780

Drawing:
2368472

Standards:
IEC 62196

Optional Accessories:
- AC dust cover with wire strap: 2411949, 2333944

Drawing 2368472

* Drawing number is not the order number.

AMP+ CI 32ED Series Charging Inlet – Type GB AC with LED Indicator

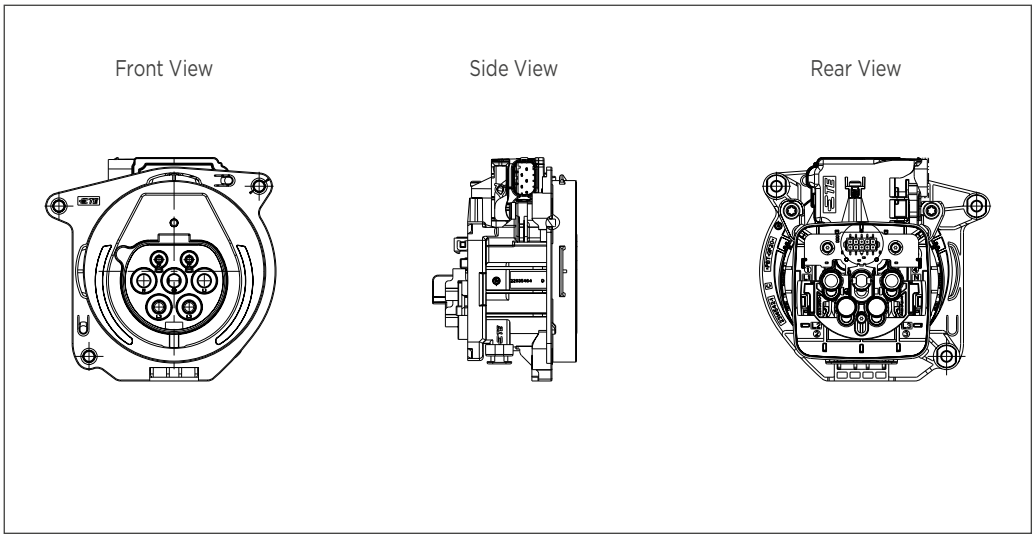

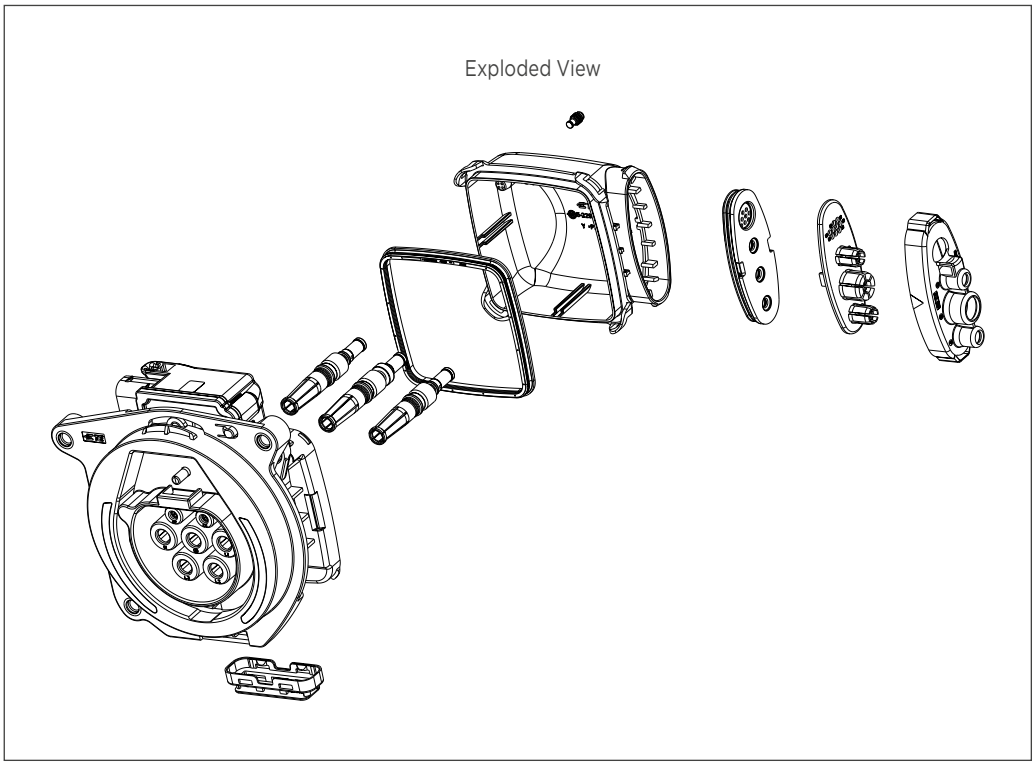

Drawing 2368478

Technical Features

Terminal Size/System:
Socket contact

AC Contacts:
6 mm^2 wire size

Voltage Rating AC:
250 VAC

Current Capacity AC:
32 A

IP Rating:
IP55 (front, mated)
IP67 (rear)

Cable Outlet:
90° left/right/down

LED Charging Indicator:
Yes

Finger Protection:
Yes

Vibration Level:
SG-2 (LV 215-1)

Application Specification:
114-94654

Product Specification:
108-94781

Drawing:
2368478

Standards:
GB/T 20234

* Drawing number is not the order number.

AMP+ CI 32ED Series Charging Inlet – Type GB AC

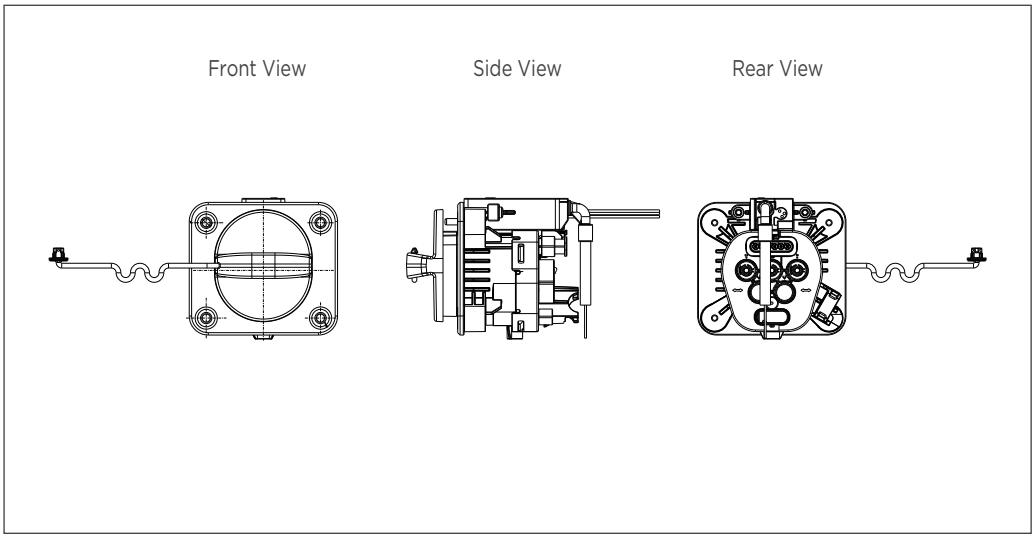

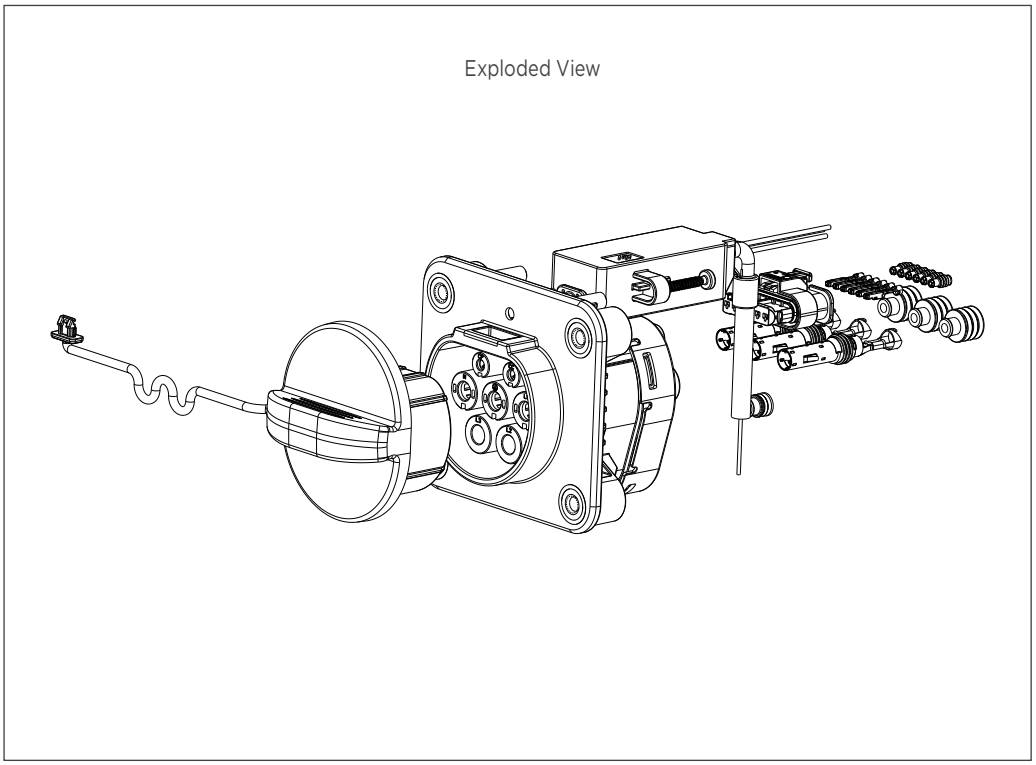

Drawing 2395540

Technical Features

Poles:
5p (single-phase) or
7p (three-phase)

Terminal Size/System:
Round contact

Wire Size:
2.5 mm^2 to 6 mm^2 wire size

Voltage Rating:
250 VAC and 380 VAC

Current Capacity AC:
32 A

IP Rating (mated):
IPX7 immersion with pressure
IPX9K on interface, flap open

Cable Outlet:
180°

LED Charging Indicator:
No

Assembly Type:
Rear

Temperature Sensor:
2 Pcs NTC for L1/N
R25°C = 10kΩ ±1%
B25/50 = 2950k ±1%

Application Specification:
114-160179

Product Specification:
108-160334

Drawing:
2395540

Standards:
GB/T 20234.1
GB/T 20234.2

Item	Installation Type	Cable Exit Direction	Actuator	Current	Wire Size
1	Rear	180°	No	10 A	2.5 mm^2
2			Yes	16 A	4 mm^2
3			Yes	32 A	6 mm^2

Actuator not required for current levels less than 16 A.

* Drawing number is not the order number.

Technical Features

Compatible With:
Type 1/CCS Type 1
Type 2/CCS Type 2
Type GB AC

Position Sensing:
Micro-Switch or light barrier switch

No. of Detectable Positions:
3: start, end, operating position

Wired Connection to Vehicle:
Sealed 4-pos. MQS inter-connection system interface

Number of Pins:
3 or 4

IP Rating, Mated:
IP65, IP67

Lifetime Cycles:
50k Micro-Switch variant
84k light barrier variant

Product Specification:
108-94519

Drawing:
2392464

Standards:
IEC 62196
GB/T 20234

AMP+ Charging Inlet Actuators

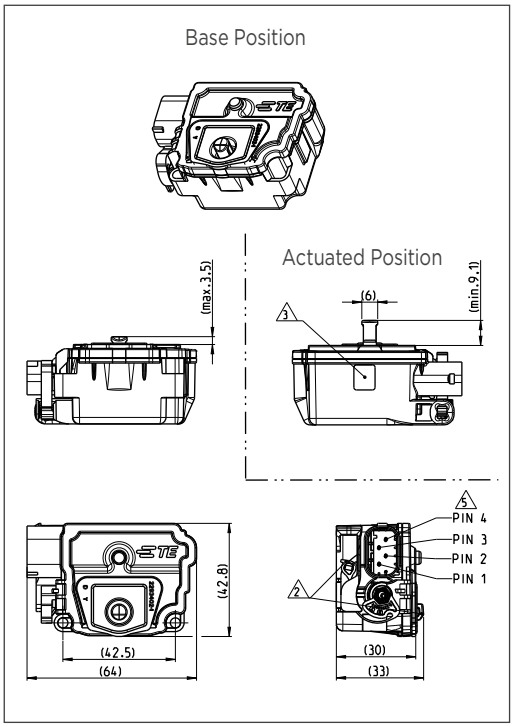

Type 1 Option

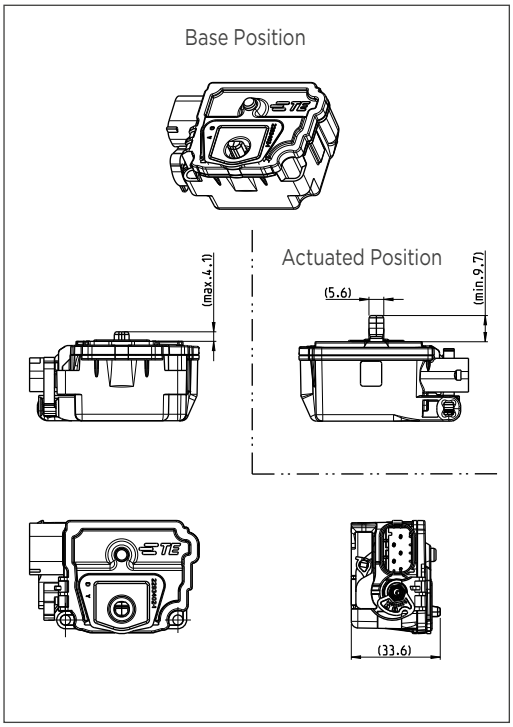

Type 2 Option

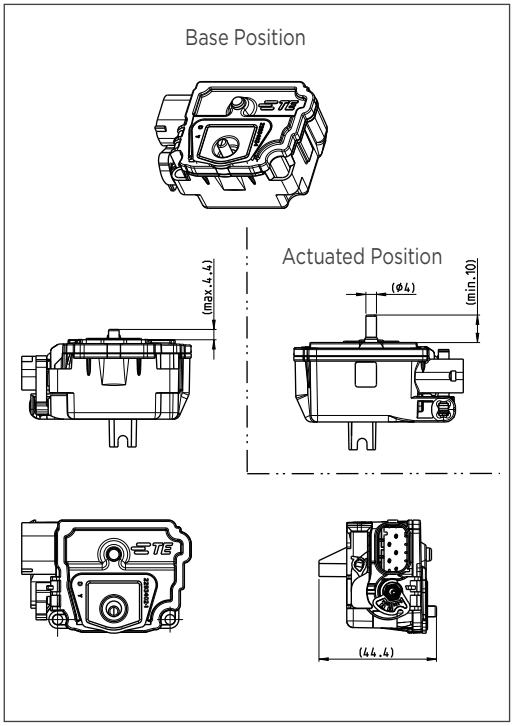

Type GB AC Option

Drawing 2392464

* Drawing number is not the order number.

Technical Features

Terminal Size/System:
Round contact

AC Contacts:
6 mm^2 wire size

DC Contacts:
50 mm^2 wire size

Cable Length:
2 m or 4 m

Voltage Rating AC:
250 VAC

Voltage Rating DC:
600 VDC

Current Capacity AC:
32 A

Current Capacity DC:
200 A

IP Rating:
IP55 (front, mated)
IP67 (rear)

Cable Outlet:
90°/90° left
90°/90° right
90°/180° left
90°/180° right
180°/180°

LED Charging Indicator:
No

Finger Protection:
Yes

Vibration Level:
SG-2 (LV 215-1)

Product Specification:
108-94777

Drawing:
2406969

Standards:
IEC 62196

Optional Accessories::
- Flap assembly: 2337030
- AC/DC dust cover with wire strap: 2411946, 2331969, 2333944

AMP+ CI 200 Series Charging Harness Assembly – CCS Type 1

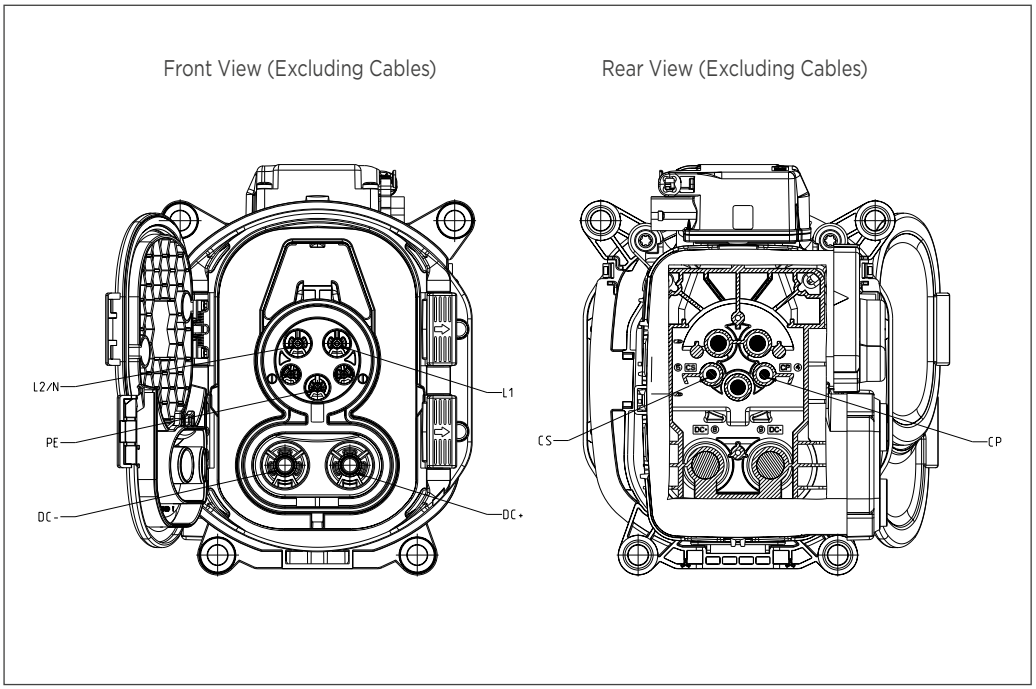

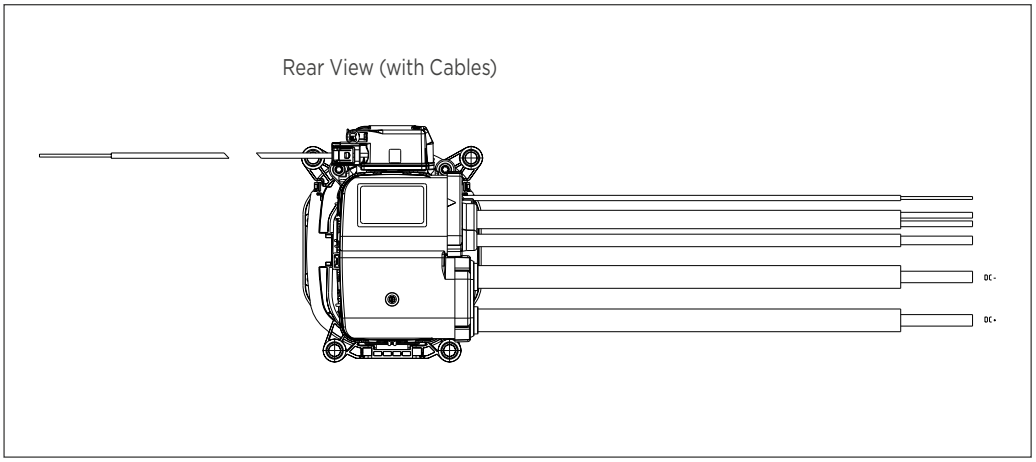

Drawing 2406969

* Drawing number is not the order number.

Technical Features

Terminal Size/System:
Round contact

AC Contacts:
6 mm^2 wire size

DC Contacts:
50 mm^2 wire size

Cable Length:
2 m or 4 m

Voltage Rating AC:
480 VAC

Voltage Raging DC:
1,000 VDC

Current Capacity AC:
32 A

Current Capacity DC:
200 A

IP Rating:
IP55 (front, mated)
IP67 (rear)

Cable Outlet:
90°/90° left
90°/90° right
90°/180° left
90°/180° right
180°/180°

LED Charging Indicator:
No

Finger Protection:
Yes

Vibration Level:
SG-2 (LV 215-1)

Product Specification:
108-94778

Drawing:
2408732

Standards:
IEC 62196

Optional Accessories:
- Flap assembly: 2337030
- AC/DC dust cover with wire strap: 2411949, 2331969, 2333944

AMP+ CI 200 Series Charging Harness Assembly – CCS Type 2

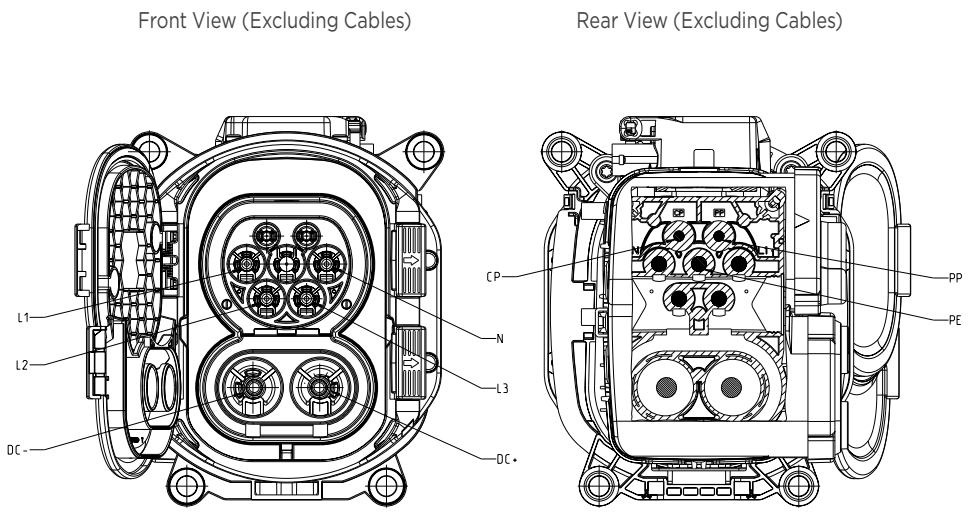

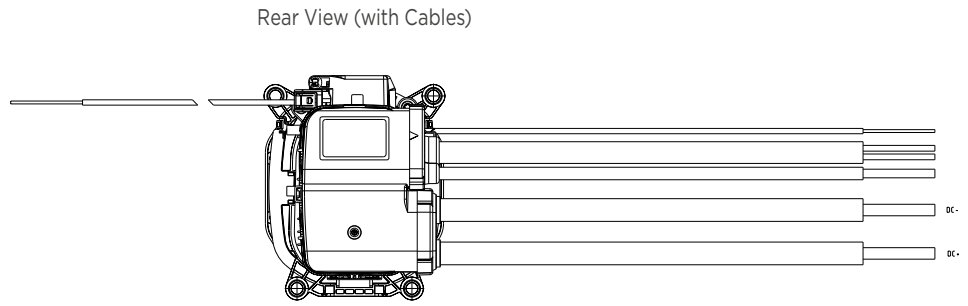

Drawing 2408732

* Drawing number is not the order number.

AMP+ CI 200 Series Charging Harness Assembly – CCS Type 2 with LED Indicator

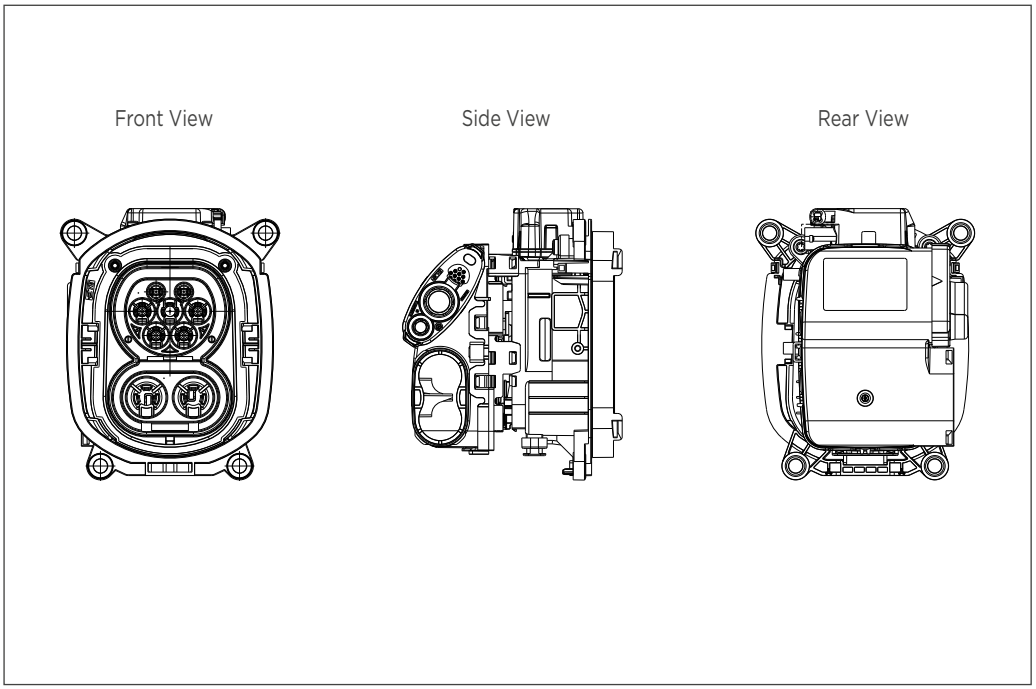

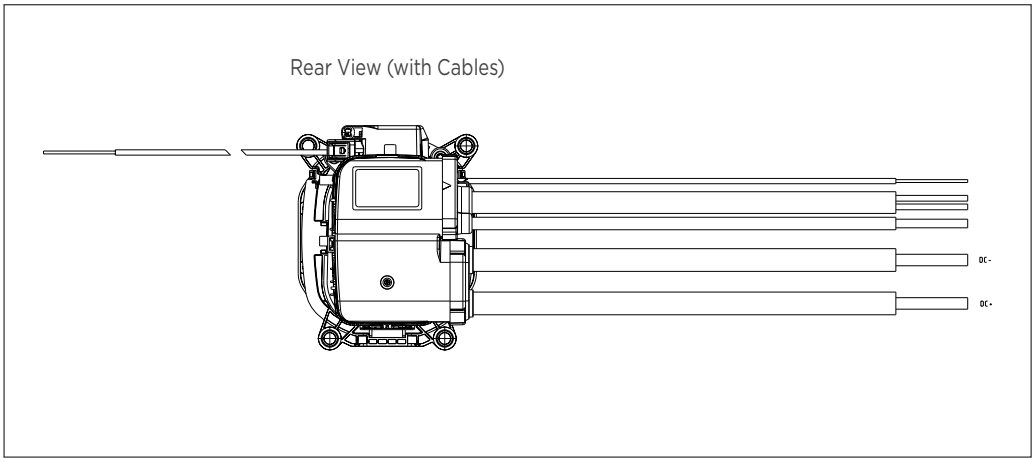

Drawing available upon request.

Technical Features

Terminal Size/System:
Round contact

AC Contacts:
6 mm^2 wire size

DC Contacts:
50 / 70 mm^2 wire size

Cable Length:
2 m or 4 m

Voltage Rating AC:
480 VAC

Voltage Raging DC:
1,000 VDC

Current Capacity AC:
200 / 250 A

Current Capacity DC:
200 A

IP Rating:
IP55 (front, mated)
IP67 (rear)

Cable Outlet:
90°/90° left
90°/90° right
180°/180°

LED Charging Indicator:
Yes

Finger Protection:
Yes

Vibration Level:
SG-2 (LV 215-1)

Product Specification:
108-94778

Drawing:
Available upon request

Standards:
IEC 62196

Optional Accessories:
- Flap assembly: 2337030
- AC/DC dust cover with wire strap: 2411946, 2331969, 2333944

* Drawing number is not the order number.

Technical Features

Terminal Size/System:
Round contact

AC Contacts:
6 mm^2 wire size

Cable Length:
2 m or 4 m

Voltage Rating AC:
250 VAC

Current Capacity AC:
32 A

IP Rating:
IP55 (front, mated)
IP67 (rear)

Cable Outlet:
90° left/right/down

LED Charging Indicator:
Yes

Finger Protection:
Yes

Vibration Level:
SG-2 (LV 215-1)

Product Specification:
108-94779

Drawing:
2408730

Standards:
IEC 62196

Optional Accessories:
- AC dust cover with wire strap: 2411346, 2333944

AMP+ CI 32ED Series Charging Harness Assembly – Type 1 with LED Indicator

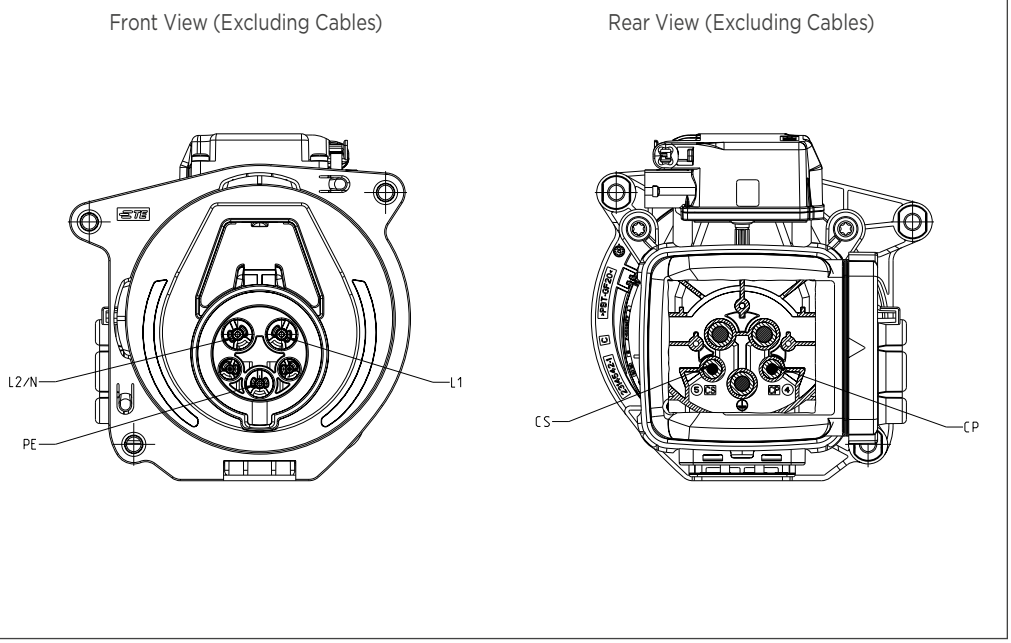

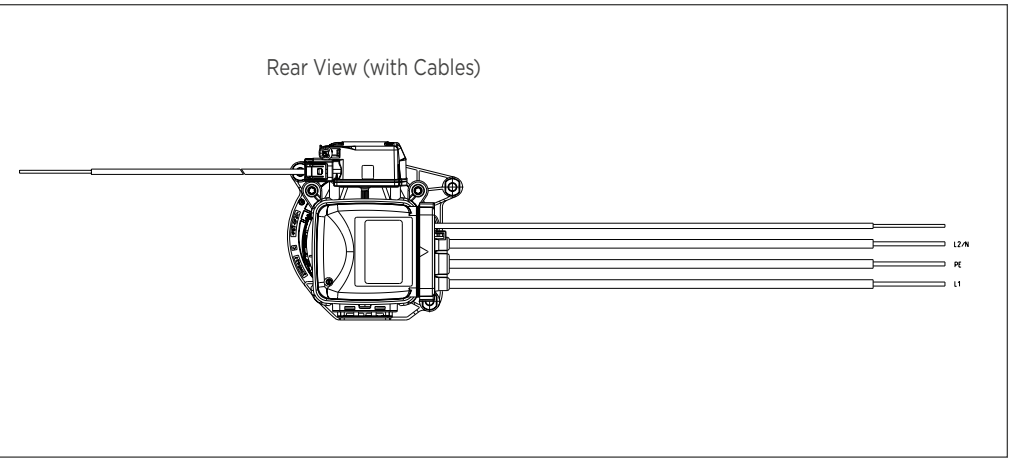

Drawing 2408730

* Drawing number is not the order number.

Technical Features

Terminal Size/System:
Round contact

AC Contacts:
6 mm^2 wire size

Cable Length:
2 m or 4 m

Voltage Rating AC:
480 VAC

Current Capacity AC:
32 A

IP Rating:
IP55 (front, mated)
IP67 (rear)

Cable Outlet:
90° left/right/down

LED Charging Indicator:
Yes

Finger Protection:
Yes

Vibration Level:
SG-2 (LV 215-1)

Product Specification:
108-94780

Drawing:
2408729

Standards:
IEC 62196

Optional Accessories:
- AC dust cover with wire strap: 2411949, 2333944

AMP+ CI 32ED Series Charging Harness Assembly – Type 2 with LED Indicator

Front View (Excluding Cables)

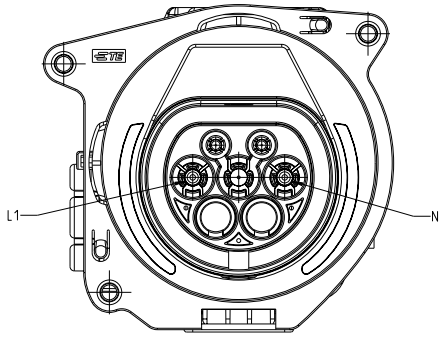

Rear View (Excluding Cables)

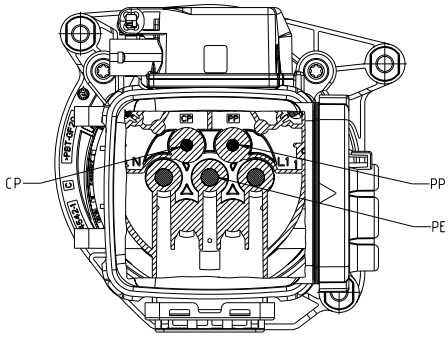

Rear View (with Cables)

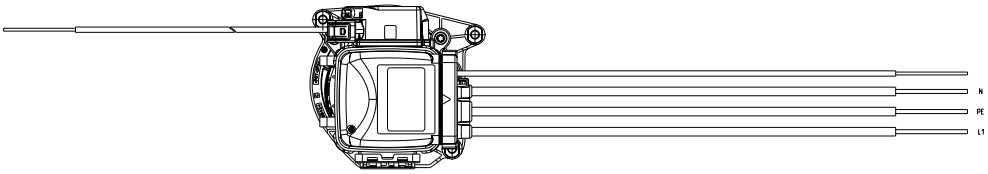

Drawing 2408729

* Drawing number is not the order number.

AMP+ CI 32ED Series Charging Harness Assembly – Type GB AC with LED Indicator

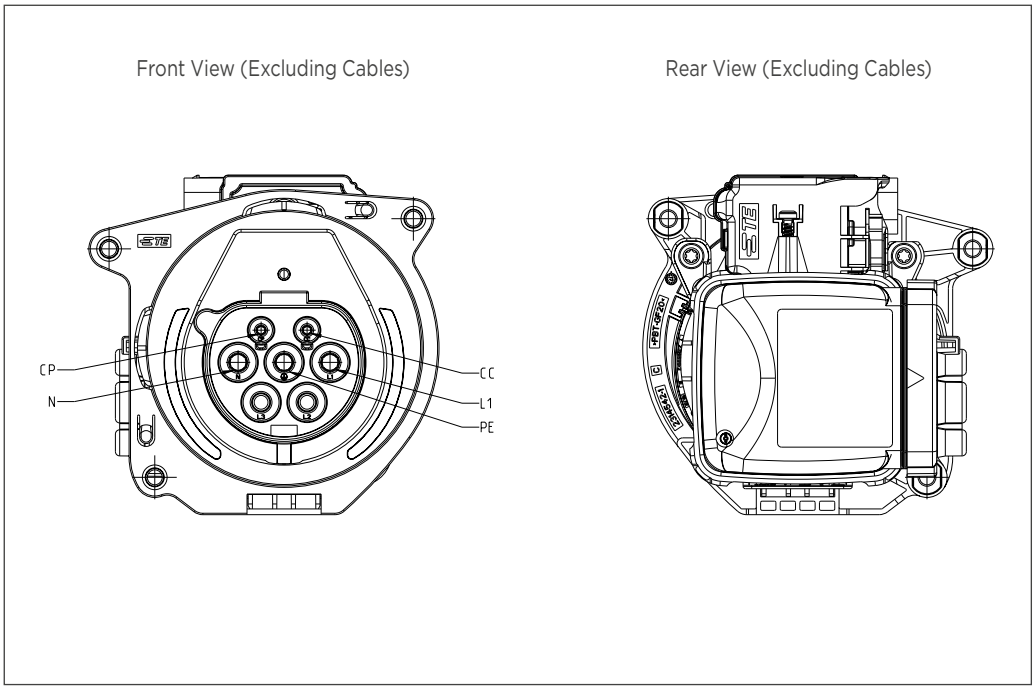

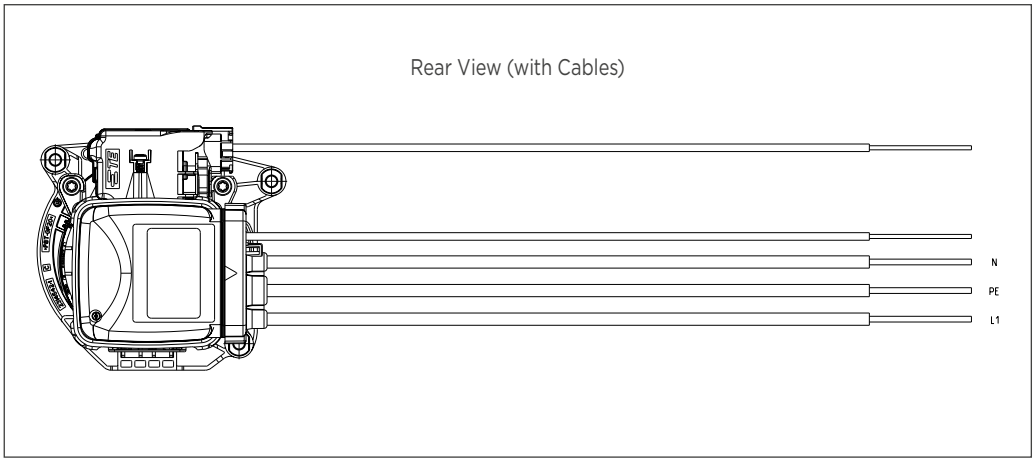

Drawing 2408731

Technical Features

Terminal Size/System:
Socket contact

AC Contacts:
6 mm^2 wire size

Cable Length:
2 m or 4 m

Voltage Rating AC:
250 VAC

Current Capacity AC:
32 A

IP Rating:
IP55 (front, mated)
IP67 (rear)

Cable Outlet:
90° left/right/down

LED Charging Indicator:
Yes

Finger Protection:
Yes

Vibration Level:
SG-2 (LV 215-1)

Product Specification:
108-94781

Drawing:
2408731

Standards:
GB/T 20234

Optional Accessories:
- AC dust cover with wire strap: 2411949, 2333944

* Drawing number is not the order number.

E-mobility Solutions for Industrial & Commercial Vehicles

The trend in electric drivetrains extends well beyond passenger cars. Industrial and commercial vehicles – from light-duty equipment to delivery vans, tractor-trailers, mass transit, and heavy-duty construction, farming and mining equipment – are also making the move toward adopting fully electrified powertrain architectures. These commercial applications demand extremely high power and flawless operation in very harsh environments where failure is not an option.

Our end-to-end HIVONEX connectivity and charging solutions are designed to help OEMs transition into the next generation of E-mobility and can be tailored to the increased power transfer needs of industrial and commercial vehicle architectures.

To learn more about our HIVONEX e-mobility connector portfolio, please visit our website: Rugged Solutions for Truck, Bus and Off-Road Vehicles, or reach out to us via our contact us page.

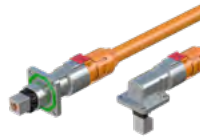

PowerTube Connector

A modular and scalable solution for reliable and safe connectivity

IPT-HD Power Bolt Connector

A bolted connectivity solution that offers high performance and easier assembly

ICT Charging Inlets

A ruggedized charging solution with increased modularity – TE offers pre-assembled kits and cable assemblies for added convenience

HVA HD400 High-Voltage Accessories Connector

A compact, sealed solution for nearly any high-voltage accessory in your vehicle design

APPLICATION TOOLING

Application Tooling Solutions for High-Voltage Wire Processing & Termination

A quality connection is essential to delivering high performance and reliability in extreme environments. From crimping a terminal onto a wire or pressing a connector onto a board, our equipment and services are designed to maximize production uptime, extend tooling life, and minimize manufacturing waste.

High-voltage wires require clean, precise cuts to maintain quality and safety standards. Our wire processing solutions for electric vehicle applications give you the power you need to terminate connectors and process large wires quickly, flexibly, and affordably.

Additionally, our high-force, benchtop presses can produce up to 178kN (20T) of crimp force to process terminations for wires up to 120 mm^2. They support a wide variety of modular die sets that can crimp both TE and non TE terminals.

For more information, visit our Application Tooling page, or contact us at

Americas: +1 717 810 2082
EMEA: +49 6251 133 3936
APAC: +86 21 3325 9030

IP Code | Elements and Significance acc. to IEC 60529 and DIN 40050

1st Digit	Against Foreign Objects (incl. Dust)	
0		Not protected.
1	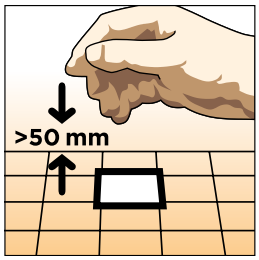	Protected against solid objects greater than 50 mm (ex. back of hand).
2	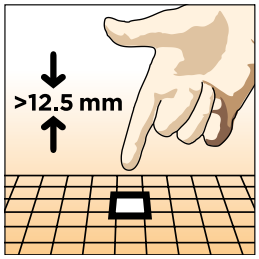	Protected against solid objects greater than 12.5 mm (ex. finger).
3	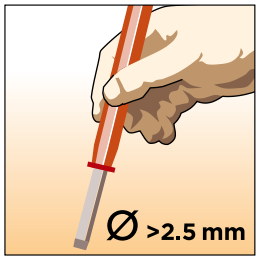	Protected against solid objects greater than 2.5 mm (ex. tool).
4	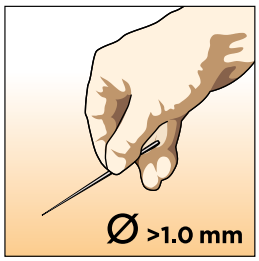	Protected against solid objects greater than 1.0 mm (ex. wire).

1st Digit	Against Foreign Objects (incl. Dust)	
5K	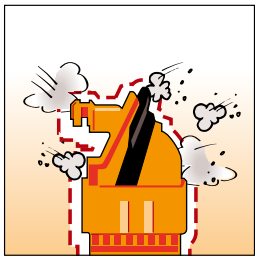	Dust protected.
6K		Dust tight.

IP Code | Elements and Significance acc. to IEC 60529 and DIN 40050

2nd Digit	Against Water		2nd Digit	Against Water	
0		Not protected.	5		Protected against jetting water.
1		Protected against vertically dripping water.	6		Protected against powerfully jetting water.
2	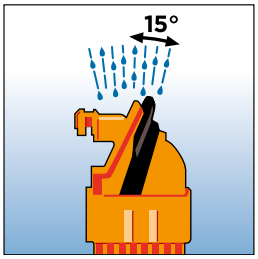	Protected against dripping water when tilted up to 15°.	6K		Protected against powerfully jetting water with increased pressure (Automotive).
3	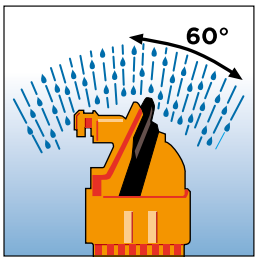	Protected against spraying water (up to 60° inclination).	7	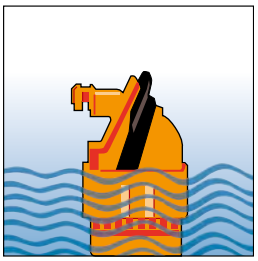	Protected against the temporary effects of immersion up to 1 meter.
4		Protected against splashing water.	8	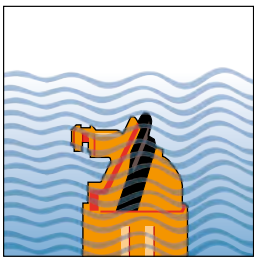	Protected against continuous submersion agreed with customer, but more severe than code 7.
4K		Protected against splashing water with increased pressure.	9K		Protected against high-pressure/ steam-jet cleaning (Automotive).

TE CONNECTIVITY ONLINE

TE.com offers an enhanced digital experience, with more than 250,000 parts profiled. The site has deep, rich product data and easier access to tools and services. Other offerings include improved search and navigation combined with knowledge and idea sharing.

Products By Applications

Learn more about our e-mobility solutions by searching according to the vehicle's application area:

www.te.com/e-mobility

Product Information

Search for a specific product by category, part number or document number.

www.TE.com

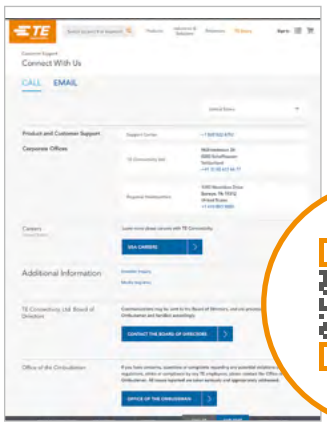

Stay Connected

You can rely on our Product Information Center (PIC) team to answer your general or technical questions. To contact a PIC representative, visit

www.TE.com/support-center

EUROPE
Germany

Product Information Center:
Phone: +800 0440-5100
Fax: +49 6251-133-1988

UNITED STATES
Pennsylvania

Product Information Center:
Phone: +1 800-522-6752
Fax: +1 717-986-7575

SOUTH AMERICA
Brazil

Phone: +54 11-4733-2015
Fax: +54 11-4733-2083

SOUTH AFRICA
Port Elizabeth

Phone: +27 41-503-4500
Fax: +27 41-581-0440

ASIA / PACIFIC
Australia

Product Information Center:
Phone: +61 2-9840-8200
Fax: +61 2-9634-6188

People's Republic of China

Hong Kong
Phone: +852 2738-8731
Fax: +852 2735-0243

People's Republic of China

Shanghai
Phone: +86 21-3398-0000
Fax: +86 21-3398-1999

Korea

Phone: +82 2-3415-4500
Fax: +82 2-3486-3810

DISCLAIMER

This document reflects the state-of-the-art result of the work of TE Connectivity (TE). While TE has made every reasonable effort to ensure the accuracy of the information in this document, TE does not guarantee that it is error-free, nor does TE make any other representation, warranty or guarantee that the information is accurate, correct, reliable or current. TE expressly disclaims all implied warranties regarding the information contained herein, including, but not limited to, any implied warranties of merchantability or fitness for a particular purpose. The document is subject to change without notice. Consult TE for the latest dimensions and design specifications.

aut-emo-inlets-cat-3-1773984-7-a4-en | Revision 03-2023

TE Connectivity Germany GmbH
Ampèrestrasse 12–14
64625 Bensheim | Germany