CATALOGUE NUMBER: NAA0735-0785
SUITS CONDUCTOR

STRANDING	COND. TYPE	DIAMETER	FITTING LAY
7/2.50	AAC/AAAC	7.50	RIGHT HAND
3/4/2.50	ACSR	7.50	RIGHT HAND
6/1/2.50	ACSR	7.50	RIGHT HAND

ARMOUR RODS

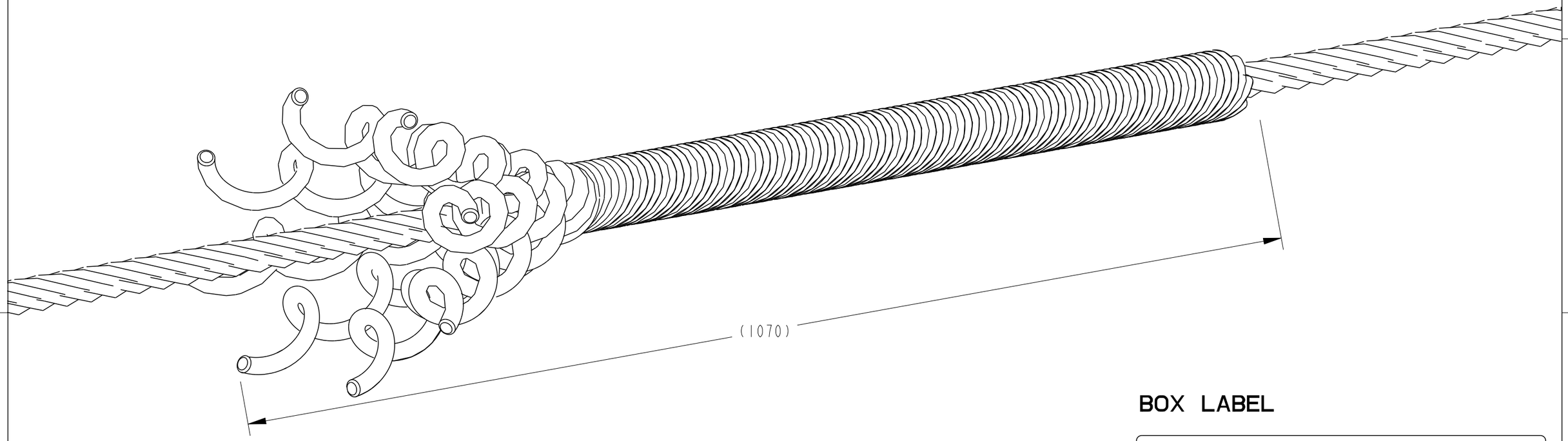

TECHNICAL SPECIFICATIONS;

CATALOGUE NUMBER: NAA0735-0785
DESCRIPTION: NON-TENSION ALUMINIUM ARMOUR RODS (NAA) FITTING
MATERIAL: ALUMINIUM ALLOY
NUMBER OF RODS: 8
ROD DIAMETER: 3.66mm
OVERAL LENGTH: 1070mm
END FINISH: CHAMFERED
FITTING LAY DIRECTION: RIGHT HAND
COLOUR CODED: BLUE
RODS ARE LABELED, BUNDLED IN A SET AND TAPED AT BOTH ENDS.

PRODUCT LABEL

NAA0735-0785
7/2.50 AAC/AAAC
3/4/2.50 & 6/1/2.5 ACSR

WEIGHT: 0.25kg
BATCH NO: ----------
MONTH/YEAR: ----------

BOX LABEL

P/N: NAA0735-0785
ID:
DESCRIPTION:
NON-TENSION ALUMINIUM ARMOUR RODS (NAA) FITTING
7/2.50 AAC/AAAC
6/1/2.50 & 3/4/2.50 ACSR
RANGE: 7.35 - 7.85
COLOUR-CODE: BLUE
QTY: 50 WEIGHT: ----- BATCH: ------

POS	REV	REVISION RECORD	DATE	DWN	APVD
LOC					
DIST	—	1 NEW RELEASE	19-04-2013	RN	AT

IMPLIED NOTES
BURRS AND SHARP EDGES REMOVED
SCREW THREADS ARE TO AS 1275
DO NOT WORK TO DIMS MARKED REF
SURFACE FINISH 6.3 U.N.O.
DIMS ARE IN mm. DO NOT SCALE

IMPLIED TOLERANCES
HOLE DIA AND LOCATIONS.±0.5mm.
DIMENSIONS UP TO 30mm..±1.5mm.
DIMENSIONS OVER 30mm...±5%.
UP TO A MAX OF.....±5mm.
ANGULAR DIMENSIONS.....±5°.

TCPN: -
PART Alias UTX/DUL: NAA0735-0785
Cat No: NAA0735-0785
MATERIAL DESC: ALUMINIUM ALLOY
MATERIAL NO: -
MATL SPEC/STD/DRG NO: -
PROCESS SPEC HEAT TREAT/PLATING NO:

TITLE: NON-TENSION ALUMINIUM ARMOUR RODS (NAA) FITTING
COND.RANGE: Ø7.35-Ø7.85 7/2.50 AAC/AAAC 6/1/2.50 & 3/4/2.50 ACSR

DRAWN: RN | DATE: 19-04-2013
CHECKED: MN | APPROVED: AT

TE Connectivity
2/3 Corella Close
Berkeley Vale NSW 2261 Australia

SIZE: A3 | PROJECTION: 3RD ANGLE | SCALE: 1:60 | DRAWING NO: NAA0735-0785-C | SHEET 1 OF 1 | REV 1

Format: generic_ma3_au_rl.frm
Template: tec_generic_a3_metric_au_rl.drw
Dwg No from Pt Mod Fam Tbl: >AUXXXXX

THIS DRAWING IS A CONTROLLED DOCUMENT
DRAWING NO NAA0735-0785-C
THIS INFORMATION IS CONFIDENTIAL AND PROPRIETARY TO TE CONNECTIVITY CORPORATION AND ITS WORLDWIDE SUBSIDIARIES AND AFFILIATES. IT MAY NOT BE DISCLOSED TO ANYONE, OTHER THAN TE CONNECTIVITY PERSONNEL, WITHOUT WRITTEN AUTHORIZATION FROM TE CONNECTIVITY CORPORATION, AUSTRALIA.