THIS DRAWING IS UNPUBLISHED. RELEASED FOR PUBLICATION -
© COPYRIGHT copyright_date BY - ALL RIGHTS RESERVED.

REVISIONS

P	LTR	DESCRIPTION	DATE	DWN	APVD
	A	NEW CREO DRAWING	26JUL2018	JP	KG
	B	ECR-21-116039	07SEP2021	BV	SZG

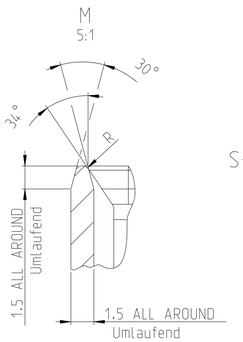

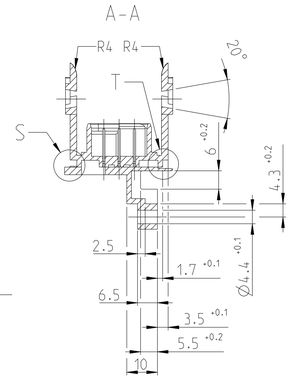

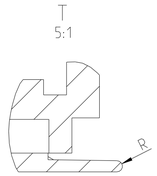

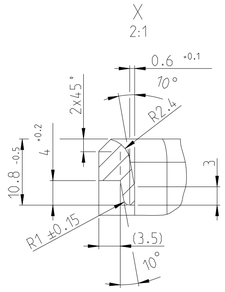

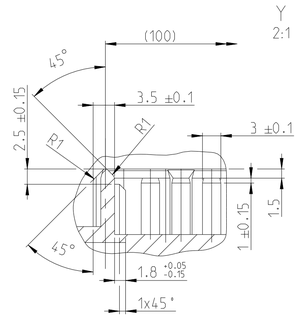

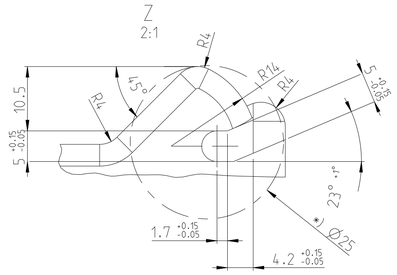

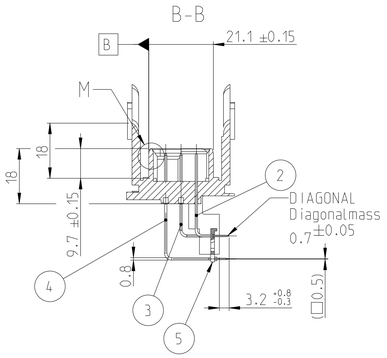

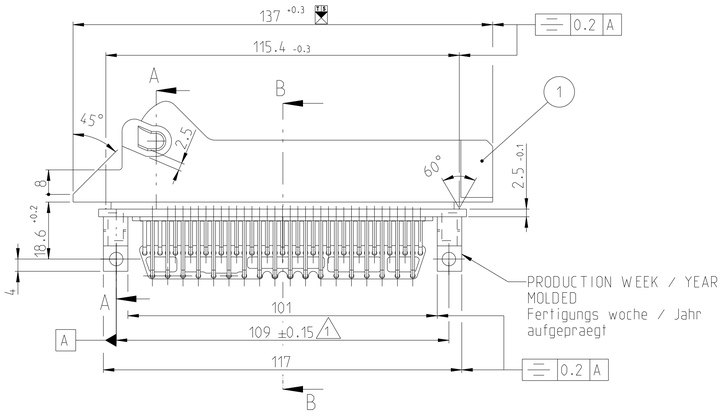

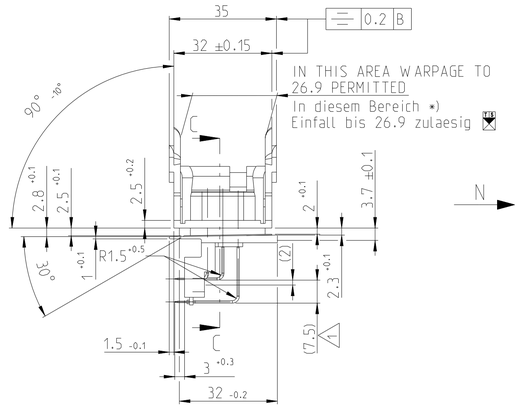

N

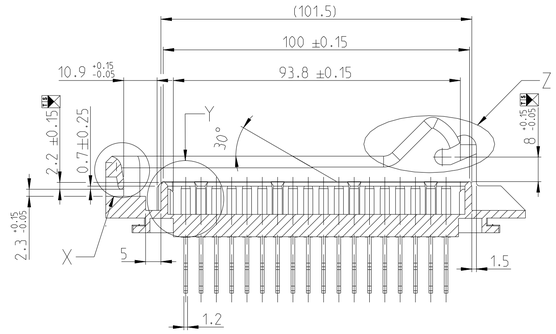

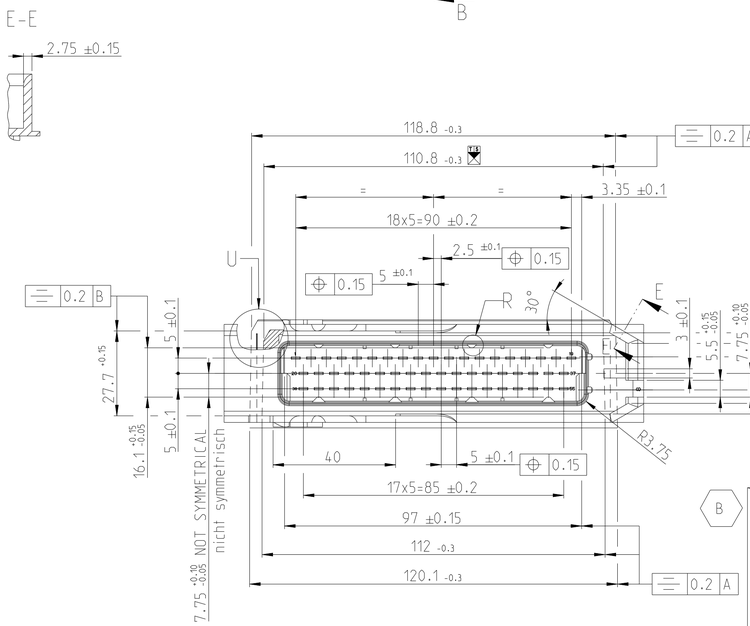

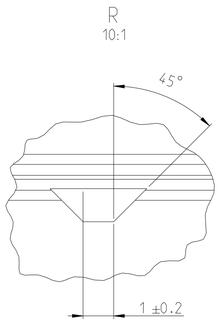

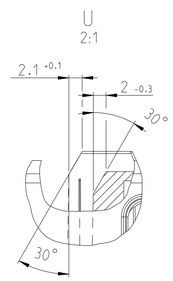

VIEW "N"

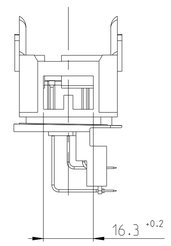

CUSTOMER SPECIFIC FOR SIEMENS
Kundenspezifisch Fuer Siemens

1 PCB MOUNTING POSITION
Loetanschlussmasse lehrenhaltig

PN / BESTELL-NR.	POS.	PCS / STUECK	COMPONENT NAME / BENENNUNG EINZELTEIL	MATERIAL / WERKSTOFF	SURFACE / OBERFLACHE / COLOR / FARBE
963063-2 (COD. 7)	1	1	55 Pos. CONNECTOR / Messerleiste	PA 6.6 GV35	BLACK / Schwarz
	5	1	CENTER PLATE / Zentrierplatte	CRASTIN1056GV10	BLACK / Schwarz
	4	18	TAB	CuZn30F53	TIN / Verzinnt
	3	18	TAB	CuZn30F53	TIN / Verzinnt
	2	19	TAB	CuZn30F53	TIN / Verzinnt
963063-1 (COD. 8)	5	1	CENTER PLATE / Zentrierplatte	CRASTIN1056GV10	BLACK / Schwarz
	4	18	TAB	CuZn30F53	TIN / Verzinnt
	3	18	TAB	CuZn30F53	TIN / Verzinnt
	2	19	TAB	CuZn30F53	TIN / Verzinnt
	1	1	55 Pos. CONNECTOR / Messerleiste	PA 6.6 GV35	BLACK / Schwarz

PRODUCT CHARACTERISTICS ACC. QMP_EMEA_012
BESONDERE MERKMALE NACH QMP_EMEA_012

THIS DRAWING IS A CONTROLLED DOCUMENT.

DIMENSIONS: mm

TOLERANCES UNLESS OTHERWISE SPECIFIED:
0 PLC ±
1 PLC ± ±0.2
2 PLC ±
3 PLC ±
4 PLC ±
ANGLES ±1

MATERIAL - -
FINISH - -

DWN SCHWAEGER 13DEC1988
CHK RYLL 13DEC1988
APVD - -
PRODUCT SPEC -
APPLICATION SPEC -
WEIGHT -

TE Connectivity

NAME 55 POS. HSG. WITH JUNIOR-TIMER TAB'S
55-pol. Messerleiste mit J.T - TAB'S

SIZE A1 | CAGE CODE 00779 | DRAWING NO C-963063 | RESTRICTED TO

CUSTOMER DRAWING | SCALE 1:1 | SHEET 1 OF 1 | REV B

4805 (3/13)