THIS DRAWING IS UNPUBLISHED. RELEASED FOR PUBLICATION 2017
© COPYRIGHT 2014 BY - TE Connectivity ALL RIGHTS RESERVED.

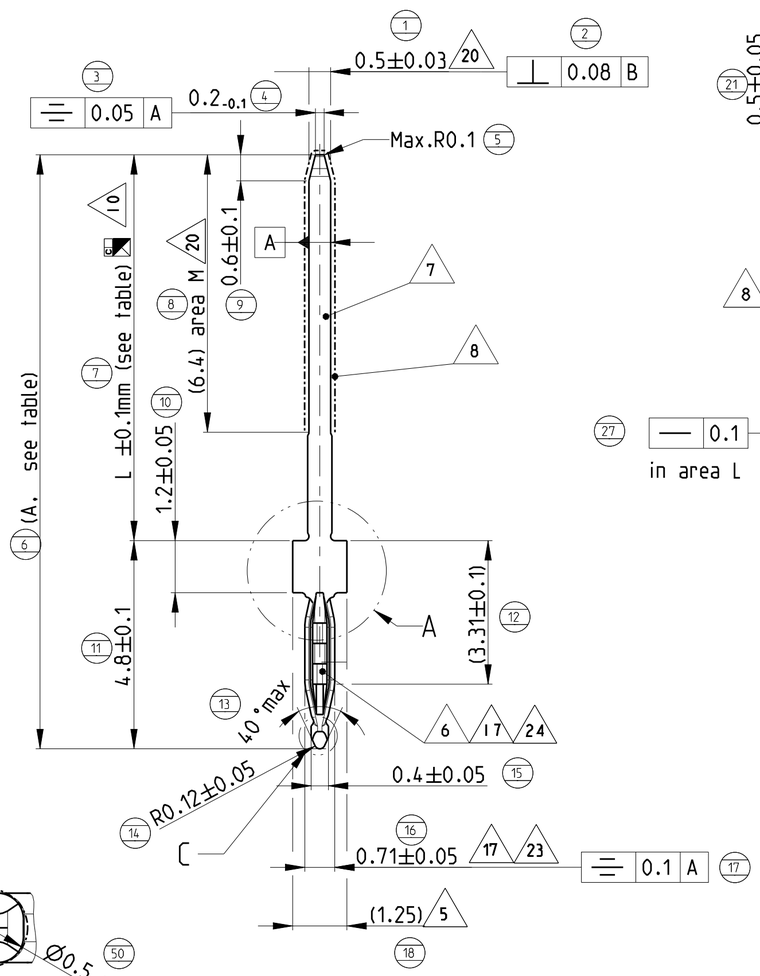

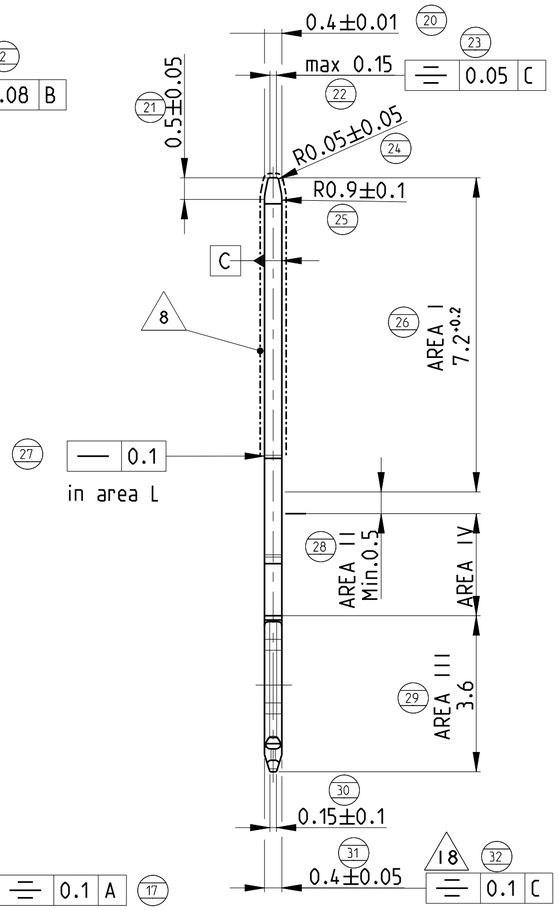

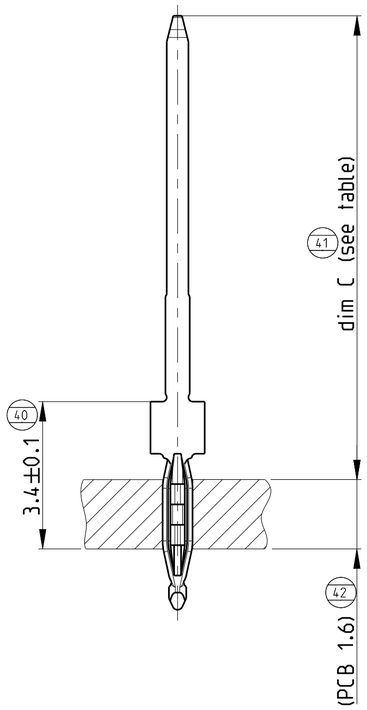

C
40:1

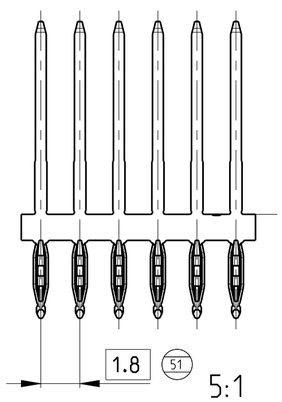

5:1

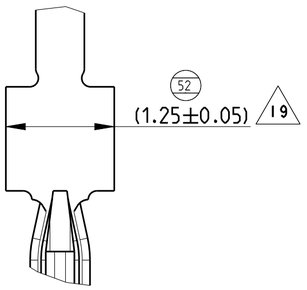

A
20:1

Numbers not on drawing :
19, 33 till 39, 43 till 49, 56 till 59

Delivery conditions:
UNREELING DIRECTION

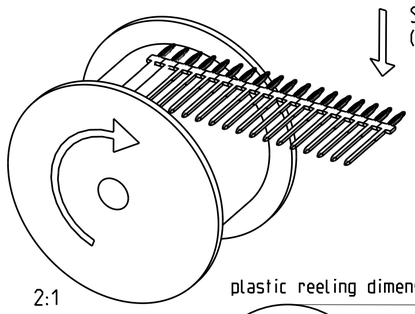

2:1

plastic reeling dimensions:

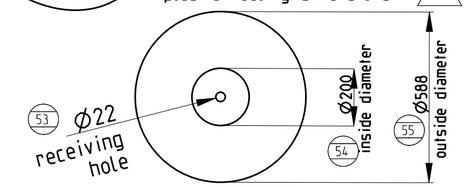

REVISIONS

P	LTR	DESCRIPTION	DATE	DWN	APVD
	A	New Drawing	03JUL2017	MBK	ND
	A1	ECR-17-014719	17OCT2017	MBK	ND
	A2	ECR-18-002310	15FEB2018	MSA	ND

60 1 IN CASE OF DISCREPANCIES BETWEEN GERMAN AND ENGLISH TEXT THE ENGLISH TEXT IS BINDING
Im Falle von Unterschieden zwischen dem deutschen und dem englischen Text ist der englische Text verbindlich

61 2 Tol ISO8015 / ISO1101.
Length. Angle. Form and Position DIN ISO 2768-mK. ISO 14405

62 3 MATERIAL: SEE TABLE
Material: siehe Tabelle

63 4 PARTS CLEANED. OIL- AND GREASEFREE
Bauteile gereinigt. oel- und fettfrei

64 5 CUT-OFF AREA
Freitrennbereich

65 6 NANO MULTISPRING PRESS-IN-AREA PER TE-SPEC.108-90836
Nano Multispring Einpresszone nach TE-Spez.108-90836

66 7 NanoMQS TIP ACC. TE-SPEC. 114-94201 (TAB 0.5x0.4)
NanoMQS Spitze nach TE-Spec. 114-94201 (Flachstecker 0.5x0.4)

67 8 NO BURRS. DISPLACEMENT OR SHARP EDGES PERMITTED
Kein Grat. Versatz und scharfe Kanten zulaessig

68 9 PLATING

Area I	Area II	Area IV	Area III	Plating Spec.
1.0-3.0 µm Sn over 1.0-2.2 µm Ni	Run-out zone Only Ni	Run-out zone Indium	S+D Adv. Indium 0.7±0.4 µm over 2±1 µm Ni	Schemp+Decker Advanced Indium Sn acc. Spec. 112-65-1 Ni acc. Spec. 112-25-2

69 10 INSPECTION CHARACTERISTIC ACC. TE-SPEC. QMP_EMEA_012
50 PARTS TO BE MEASURED
Inspection characterisitic nach TE-Spec QMP_EMEA_012
50 Stück zu vermessen

70 11 TO BE REELED ON PLASTIC REEL WITH INTERLEAVING PAPER
REEL PN. packed in cardboard REELBOX (see table on drawing)
Gewickelt auf Kunststoff spule mit Zwischenlagenpapier
Kunststofspule. verpackt in Karton REELBOX (siehe Tabelle)

71 12 STRIP SABRE LONGITUDINAL CURVATURE MAX 5MM OVER 400MM STRIP
Saebelung max 5mm für Streifen von 400mm

72 13 PITCH MEASURED OVER 40 CONTACTS: 72±1MM (40x1.8)
Abstandsmasz bei 40 Kontakten: 72±1MM (40x1.8)

73 14 TWO BREAKS ALLOWED. WITHOUT CONNECTION
Zwei Unterbrechungen erlaubt. ohne Verbindung

74 15 REFERENCE B MEASURED OVER 5 CONTACTS ON STRIP
Referenz B über 5 Kontakten an Band genommen

75 16 Pin top geometry should not exceed Ø0.5mm

76 17 100% Inline optical control of outer contour of NanoMultispring acc. TE Spec. 129-90972

77 18 dim 0.4±0.05 only for NanoMultispring area

78 19 loose piece dimension (with TE press-in tooling)

79 20 For dim 0.5 tolerance of ±0.03 valid in area M
Otherwise. tolerance +0.09 -0.03 allowed

80 21 Dimensional report measured with 5 parts per cavity

81 22 Cleanliness Class CCC=A(E8/F3/G2/H0/I00/J00) for metallic particles only

82 23 Point for measurement of thickness of plating layers

83 24 Monitoring of multispring press-fit area by inspection of each delivery charge acc. to Continental CQR 40453019_QD0_000_AB
Press in acc. to test spec. 129-90800 rev. F and 129-90973 with three pins each variant
Test PCB Fa. Schweitzer (135460-002) with min. and max. hole (reflowed)

A2

TE PART NUMBER	REV	dim L	dim A (total length)	dim C	Reel	Reelbox	MATERIAL	SURFACE
2321342-6	A	9.9	14.7	11.7	2-973162-0	973051-4	CuSn6	9

THIS DRAWING IS A CONTROLLED DOCUMENT.

DIMENSIONS: mm

TOLERANCES UNLESS OTHERWISE SPECIFIED:
0 PLC ±
1 PLC ±
2 PLC ±
3 PLC ±
4 PLC ±
ANGLES ±
2

MATERIAL: see table -

FINISH: 9 -

DWN MAHESHA B K 03JUL2017
CHK d. nollet 03JUL2017
APVD -
PRODUCT SPEC -
APPLICATION SPEC -
WEIGHT -

TE Connectivity

NAME: NanoMultispring standalone pin 05x04 Indium plating

SIZE	CAGE CODE	DRAWING NO	RESTRICTED TO
A2	-	C-2321342	-

Customer Drawing | SCALE 1:1 | SHEET 1 OF 1 | REV A2

1471-9 (3/13)