THIS DRAWING IS UNPUBLISHED. RELEASED FOR PUBLICATION -,- .
© COPYRIGHT - By - ALL RIGHTS RESERVED.

LOC	DIST
AD	00

REVISIONS

P	LTR	DESCRIPTION	DATE	DWN	APVD
	L2	REVISED PER ECO-11-004917	11MAR11	RK	HMR

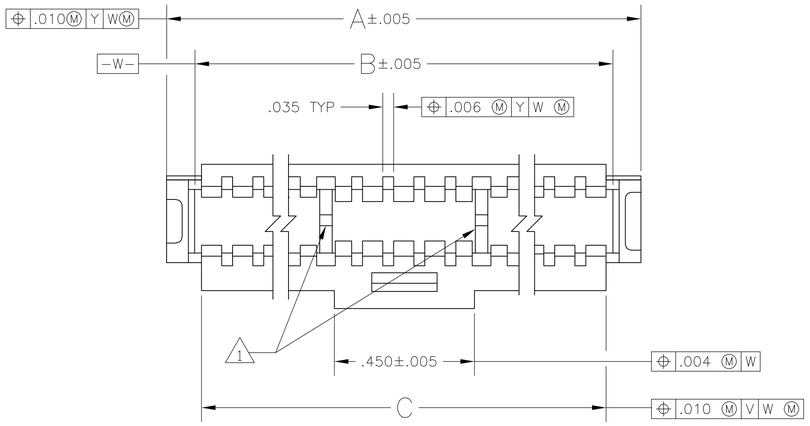

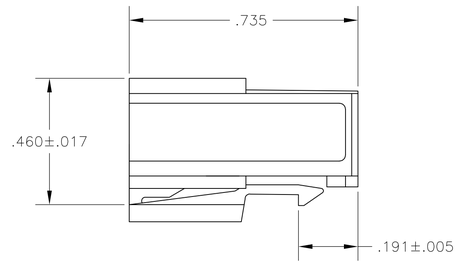

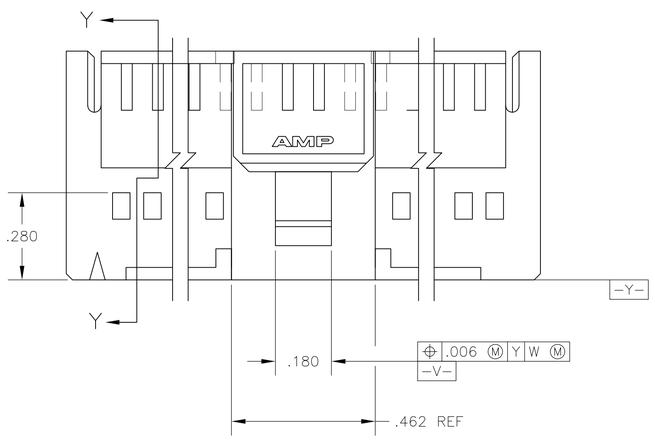

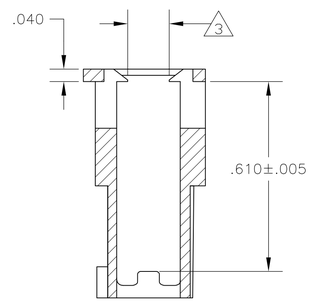

SECTION Y-Y

1. SEE TABLE FOR RIB QTY

2. THIS COUPLING SHROUD IS TO BE USED WITH AMPMODU® MTE RECEPTACLE ASSEMBLIES WITH GUIDE RIBS THE NUMBER OF POSITIONS LISTED EQUALS THE TOTAL NUMBER OF POSITIONS WHICH CAN BE CONTAINED WITHIN THE COUPLING SHROUD

3. .133 BETWEEN RIBS REFERENCED BY NOTE 1 ONLY. .153 ON ENDS (AREAS OUTSIDE OF THE RIBS).

4. OBSOLETE PARTS: OBSOLETE CIS STREAMLINING PER D.RENAUD/D.SINISI

	C	B	A	NO OF RIBS	NO OF POSN	PART NUMBER
	2.460	2.505	2.685	2	50	1-104500-1
	1.960	2.005	2.085	2	40	1-104500-0
4 OBSOLETE	1.660	1.705	1.885	2	34	~~104500-9~~
	1.560	1.605	1.785	2	32	104500-8
OBSOLETE 4	1.460	1.505	1.685	2	30	~~104500-7~~
	1.360	1.405	1.585	2	28	~~104500-6~~
	1.260	1.305	1.485	2	26	~~104500-5~~
	1.160	1.205	1.385	2	24	104500-4
	1.060	1.105	1.285	2	22	104500-3
	.960	1.005	1.185	2	20	104500-2
4 OBSOLETE	.860	.905	1.085	2	18	~~104500-1~~

THIS DRAWING IS A CONTROLLED DOCUMENT.

DIMENSIONS: INCHES

TOLERANCES UNLESS OTHERWISE SPECIFIED:
0 PLC ± -
1 PLC ± -
2 PLC ± -
3 PLC ± .010
4 PLC ± -
ANGLES ± -

MATERIAL: FLAME RETARDANT THERMOPLASTIC COLOR-BLACK

FINISH: -

DWN D KEITZER 01DEC88
CHK S.SHUEY 07DEC88
APVD C.SINISI 14DEC88

PRODUCT SPEC 108-25034
APPLICATION SPEC 114-25026
WEIGHT -

TE Connectivity

NAME: COUPLING SHROUD, AMPMODU® MTE, DOUBLE ROW, .100X.100 CL

SIZE	CAGE CODE	DRAWING NO	RESTRICTED TO
A1	00779	C-104500	-

CUSTOMER DRAWING | SCALE 4:1 | SHEET 1 OF 1 | REV L2