Product Specification
108-60018
AMP Mini Common Termination (CT) Connector
1.5 mm Pitch (MT Type), Lead Free Version

1. Scope:

1.1 Contents:

This specification covers the requirements for product performance, test methods and quality assurance provisions of AMP Mini Common Termination (CT) Connector 1.5mm Pitch (MT Type). Applicable product description and part numbers are as shown in Fig.1.

2. Applicable Documents

The following documents form a part of this specification to the extent specified herein. In the event of conflict between the requirements this specification and the product drawing, the product drawing shall take precedence. In the event of conflict between the requirements this specification and referenced documents, this specification shall take precedence.

2.1 AMP Specifications:

A. 109-5000 Test Specification, General Requirements for Test Methods

B. 114-5223 Application Specification

C. 501-60006 Test Report

2.2 Commercial Standards and Specifications:

A. MIL-STD-202: Test Methods for Electronic and Electrical Component Parts.

B. IEC: International Electrotechnical Comission

2.3 Recommended shelf life: 12 months.

If the shelf life exceed 12 months, please contact TE.

DIST

LTR	REVISION RECORD	DR	DATE
H	REVISED	T.Q	18MAR 19
F	REVISED D20070906035026_449426	C.Z	06SEP 07
D	REVISED FB00-0130-04	R.H	29JUN 04
C	REVISED FB00-0216-03	S.X	19DEC 03
B	REVISED FB00-0115-03	J.J	11JUL 03
A	REVISED FB00-0064-03	J.J	07MAY 03

DR	J. JIANG	TE Connectivity	
CHK	S. YAO		
APP	T. SASAKI	NO 108-60018	REV H / LOC ES

PAGE 1 of 15

TITLE
AMP Mini Common Termination (CT) Connector 1.5mm Pitch (MT Type), Lead Free Version

3. Requirements:

3.1 Design and Construction:

Product shall be of the design, construction and physical dimensions specified on the applicable product drawing.

3.2 Materials:

A. Receptacle Assembly

Contact: Pre tin plated Phosphor Bronze

Housing: 66 Nylon G.F. (UL94V-0)

B. Single Row Post Header Assembly Vertical (V) Horizontal (H)
Double Row Post Header Assembly Vertical (V) Horizontal (H)
DIP Type

Post: Pre tin plated Brass

Housing: 66 Nylon G.F. (UL94V-0)

C. Single Row, Double Row Post Header Assembly Vertical (V) SMT Type

Post: Pre-tin plated Brass

Housing: 6T Nylon G.F. (UL94V-0)

D. Single Row Post Header Assembly Horizontal (H) SMT Type

Post: Pre tin plated Brass

Solder Peg: Tin plated Brass

Housing: 6T Nylon G.F. (UL94V-0)

E. Single Row, Double Row Post Header Assembly Relay Panel Mount Type.

Post: Pre tin plated Brass

Housing: 66 Nylon NON G.F. (UL94V-0)

F. Holder Housing for Double Row

Housing: 66 Nylon NON G.F. (UL94V-0)

3.3 Ratings:

A. Voltage Rating: 50 V(AC/DC)

B. Current Rating (Maximum)

AWG #26: 2A, AWG #28: 1A

C. Temperature Rating: -30℃ to +105℃

The upper limit of the temperature includes the temperature rising resulted by the energized electrical current.

3.4 Applicable Wires

A. Applicable Wire Size: AWG #28, #26 (0.08-0.14mm^2)

B. Applicable Insulation Diameter

Harness Condition (Refer Fig. 14)

	A-Side	B-Side	Insulation Diameter
1)	Mini CT	Mini CT	ϕ0.8 ~ 0.95mm
2)	Mini CT	CT	ϕ0.83 ~ 0.95mm

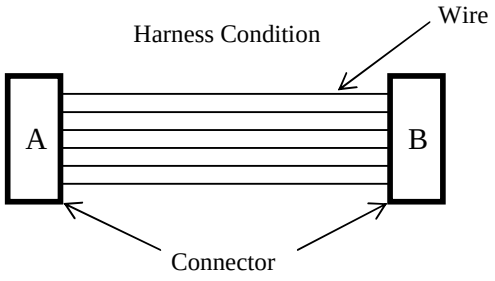

Fig. 14

3.5 Applicable Printed

A. Board Thickness: 1.6mm

B. Hole Diameter:

ϕ0.85-ϕ0.95mm (for punched holes)

ϕ0.95-ϕ1.00 (for drilled holes)

3.6 Applicable Panel Thickness

0.8-1.6mm (To be used for post header assembly relay)

3.7 Performance Requirements and Test Descriptions:

The product shall be designed to meet the electrical, mechanical and environmental performance requirements specified in Fig.2. All tests shall be performed in the room temperature unless otherwise specified.

3.8 Test Requirements and Procedures Summary:

Para.	Test Items	Requirements	Procedures
3.8.1	Examination of product	Product shall be confirming to the requirements of applicable product drawing and applicable Specification	Visually, dimensionally and functionally inspected per applicable quality inspection plan
		Electrical Requirements	
3.8.2	Termination Resistance (Low Level)	10 mΩ Max. (Initial) 20 mΩ Max. (Final)	Subject mated contacts assembled in housing to 20mV Max. open circuit at 10 mA. Fig. 4.
3.8.3	Dielectric withstanding voltage	No creeping discharge or flashover shall occur. Current leakage: 5mA Max.	500 VAC for 1 minute. Test between adjacent circuits of mated connectors. MIL STD 202 TEST METHOD 301
3.8.4	Insulation Resistance	500 MΩ Min. (Initial) 100 MΩ Min. (Final)	Impressed voltage 500VDC for 1 minute. Test between adjacent circuits of mated connectors. MIL STD 202 TEST METHOD 301 Condition A

Fig.2. To be continued

Para.	Test items	Requirements	Procedures
3.8.5	Temperature Rising	30°C Max. under loaded rating current	Contacts series-wired, apply test current of loaded rating current to the circuit, and measure the temperature rising by probing on soldered areas of contacts, after the temperature becomes stabilized deduct ambient temperature from the measured value Fig. 4
Mechanical Requirements			
3.8.6	Tensile strength of wire Termination		Apply a pull-off load to terminated wire of contact secured on the tester.Operation Speed: 50 mm/min. The load is applied in (1) the axial and (2) the traverse direction as specified. Fig.5.

Wire Size (AWG)	Tensile Strength of Wire Termination (Min.)	
	Axial Direction N (kgf)	Traverse Direction N (kgf)
26	19.6(2.0)	11.8(1.2)
28	14.7(1.5)	

Apply Halogen Free Wire

Wire Size (AWG)	Tensile Strength of Wire Termination (Min.)	
	Axial Direction N (kgf)	Traverse Direction N (kgf)
UL 3619 # 26	14.7(1.5)	7.8(0.8)
UL 10368 # 28	14.7(1.5)	7.8(0.8)

3.8.7	Post Retention Force	9.8 N (1.0 kgf) Min.	Measure post retention force. Operation Speed: 50 mm/min. Fig.6.
3.8.8	Contact Retention Force	4.9 N (0.5 kgf) Min.	Apply an axial pull-off load to crimped wire.Operation Speed: 50 mm/min.
3.8.9	Panel Mounting Force (To be applied to post header relay panel mount type)	49 N (5 kgf) Max.	Measure panel retention force using panel of nominal cut-out dimensions as specified in the drawing. Loading is made from the punch entering direction of the cut-out hole. See Fig.7.
3.8.10	Panel Retention Force (To be applied to post header relay panel mount type)	83.3 N (8.5 kgf) Min.	Measure panel retention force using panel of nominal cut-out dimensions as specified in the drawing. Loading is made from the punch entering direction of the cut-out hole. See Fig.8

Fig. 2 (To be continued)

Para.	Test Items	Requirements	Procedures
3.8.11	Connector Mating/Unmating Force	See Fig.13	Operation Speed: 50mm/min. Measure the force required to mate and unmate connectors.
3.8.12	Durability (Repeated Mate/Unmating)	20 mΩ Max. (Final)	Operation Speed: 50mm/min. No. of Cycles: 30 cycles.
3.8.13	Vibration (Low Frequency)	No electrical discontinuity greater than 1 μ sec. Shall occur. 20 mΩ Max. (Final)	Subject mated connectors to 10-55-10 Hz traversed in 1 minute at 1.52mm amplitude 2 hours each of 3 mutually perpendicular planes. 10mA applied. MIL-STD-202 TEST METHOD 201 CONDITION A I EC 68-2-6 Mounting: Fig.9
3.8.14	Physical Shock	No electrical discontinuity greater than 1 μ sec. Shall occur. 20 mΩ Max. (Final)	Accelerated Velocity: 490 mm/s^2 (50G) Waveform: halfsine shock pulse Duration: 11 m sec Number of Drops: 3 drops each to normal and reversed directions of X, Y and Z axes, totally 18 drops. 10 mA DC applied. MIL-STD-202 TEST METHOD 213 CONDITION A IEC 68-2-27 b Mounting: Fig.9
3.8.15	Hammering Shocks	No electrical discontinuity greater than 1 μ sec. Shall occur. 20 mΩ.	Under 10000 cycles of repeated hammering shocks of the condition as shown Fig.10, with the test current of 1mA at 10VDC applied to the circuit as shown in Fig.11. During the test, the circuit shall be monitored for fluctuation of electrical resistance.
3.8.16	Solderability	Wet Solder Coverage: 95% Min.	Solder Temperature: 245±3°C Immersion Duration: 3±0.5 seconds Flux: Alpha 100 (NON-active rosin base)
3.8.17	Resistance to Soldering Heat	No physical damage shall occur	<u>Flow Soldering</u> Test connector on PCB. Solder Temperature:260±5°C Immersion Duration: 10±1 sec. <u>Reflow Soldering</u> SMT product mounted on PCB to solder like Fig. 12 (measure at housing surface) <u>Manual Soldering</u> Temperature: 350 ±10°C for 3+1, -0 Seconds. To be no damages by the top of iron at soldering tynes.

Fig. 2 (To be continued)

Para	Test Items	Requirements	Procedures
3.8.18	Thermal Shock	20 mΩ Max. (Final)	Mated connector -55 °C/30min., +85 °C/30min. Making this a cycle, repeating 500cycles. IEC 68-2-14
3.8.19	Humidity, Steady State	Insulation resistance 100 MΩ Min. (Final) Termination resistance 20 mΩ Max. (Final)	Mated connector 90-95 %R.H. 40 °C, 500 hours. IEC 68-2-3
3.8.20	Humidity-Temperature Cycling	Insulation resistance 100 MΩ Min. (Final) Termination resistance 20 mΩ Max. (Final)	Mated connector, 25±65°C. 90-95 %R.H. 10 cycles. Cold shock -10 °C performed. IEC 68-2-38
3.8.21	Salt Spray	20 mΩ Max. (Final)	Subject mated 35±2°C connector to 5±1% salt concentration for 48 hours. After test, rinse the samples with water and recondition the room temperature for hour. IEC 68-2-11
3.8.22	Temperature Life (Heat Aging)	20 mΩ Max. (Final)	Mated connector 85±2°C, 500 hours. IEC 68-2-2
3.8.23	Resistance to cold	20 mΩ Max. (Final)	Mated connector -40±3°C, 500 hours. IEC 68-2-1
3.8.24	Industrial Gas (SO_2)	20 mΩ Max. (Final)	Mated connector SO_2 Gas: 10±3 ppm, 95 %R.H., 35±2 °C, 240 hours
3.8.25	Industrial Gas (H_2S)	20 mΩ Max. (Final)	Mated connector H_2S Gas: 3 ppm, 75 %R.H., 40±3 °C, 240 hours
3.8.26	Industrial Gas (Ammonia)	20 mΩ Max. (Final)	After 72 hours exposure in ammonia chamber with 25 cc of 3% ammonia solution for every liter of chamber capacity.
3.8.27	Resistance to Solvent	Connector shall be free from fusion and discoloration that detrimental to connector function	Unmated connector (lsopropy lalcohol) immerse in solvent normal temperature 90 seconds

Fig. 2 (End)

4. Product Qualification Test Sequence

Test of Examination	Test Group											
	1	2	3	4	5	6	7	8	9	10	11	12
	Test Sequence(a)											
Examination of Product	1, 6	1, 3	1, 3	1, 3	1, 3	1, 3	1, 3	1, 3	1, 5	1, 5	1, 5	1, 5
Termination Resistance (Low Level)									2, 4	2, 4	2, 4	2, 4
Dielectric withstanding voltage	2, 5											
Insulation Resistance	3											
Temperature Rising		2										
Tensile Strength of Wire Termination			2									
Post Retention Force				2								
Contact Retention Force					2							
Panel Mounting Force						2						
Panel Retention Force							2					
Connector Mating/Unmating Force								2				
Durability (Repeated Mate/Unmating)									3			
Vibration (Low Frequency)										3		
Physical Shock											3	
Hammering Shocks												3
Solderability												
Resistance to Soldering Heat												
Thermal Shock												
Humidity (Steady State)	4											
Humidity-Temperature Cycling												
Salt Spray												
Temperature Life (Heat Aging)												
Resistance to Cold												
Industrial SO_2 Gas												
Industrial H_2O Gas												
Industrial Ammonia Gas												
Resistance to Solvent												

(a) Numbers indicated sequence in which tests are performed.

Fig.3 (To be continued)

Test of Examination	Test Group											
	13	14	15	16	17	18	19	20	21	22	23	24
	Test Sequence(a)											
Examination of Product	1, 5	1, 5	1, 5	1, 5	1, 5	1, 5	1, 5	1, 5	1, 5	1, 5	1, 5	1, 5
Termination Resistance (Low Level)	2, 4	2, 4	2, 4	2, 4	2, 4	2, 4	2, 4	2, 4	2, 4	2, 4	2, 4	2, 4
Dielectric withstanding voltage												
Insulation Resistance												
Temperature Rising												
Tensile Strength of Wire Termination												
Post Retention Force												
Contact Retention Force												
Panel Mounting Force												
Panel Retention Force												
Connector Mating/Unmating Force												
Durability (Repeated Mate/Unmating)												
Vibration (Low Frequency)												
Physical Shock												
Hammering Shocks												
Solderability	3											
Resistance to Soldering Heat		3										
Thermal Shock			3									
Humidity (Steady State)				3								
Humidity-Temperature Cycling					3							
Salt Spray						3						
Temperature Life (Heat Aging)							3					
Resistance to Cold								3				
Industrial SO_2 Gas									3			
Industrial H_2O Gas										3		
Industrial Ammonia Gas											3	
Resistance to Solvent												3

(a) Numbers indicated sequence in which tests are performed.

Fig.3 (End)

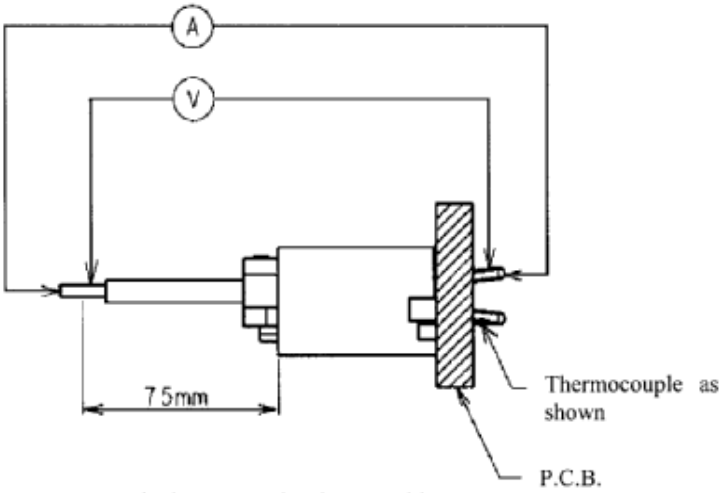

Ex. Single row post header assembly
(v) dip type

Fig. 4

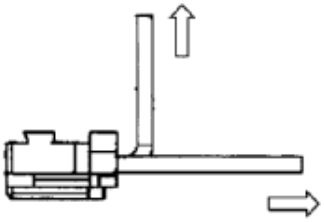

Fig. 5

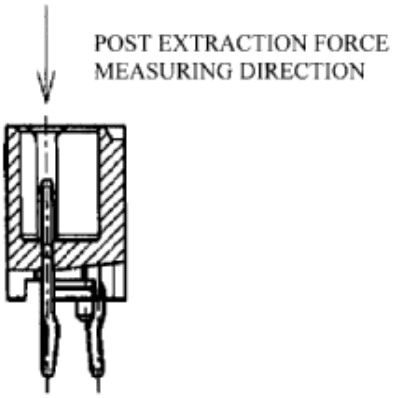

Fig. 6

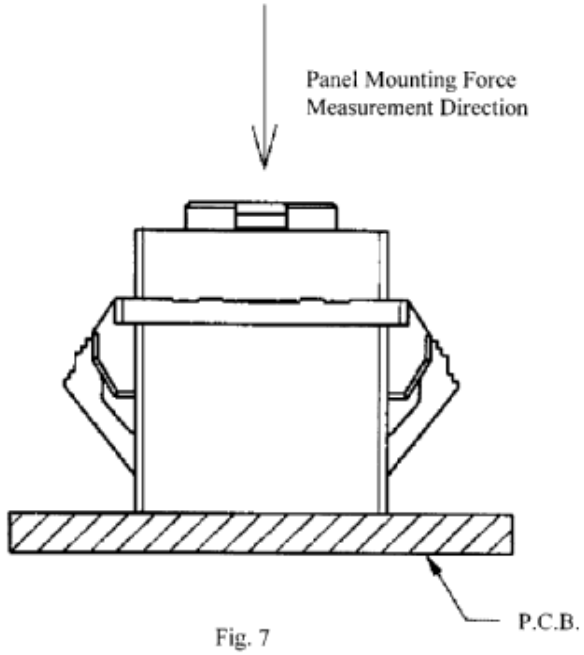
Panel Mounting Force
Measurement Direction
P.C.B.

Fig. 7

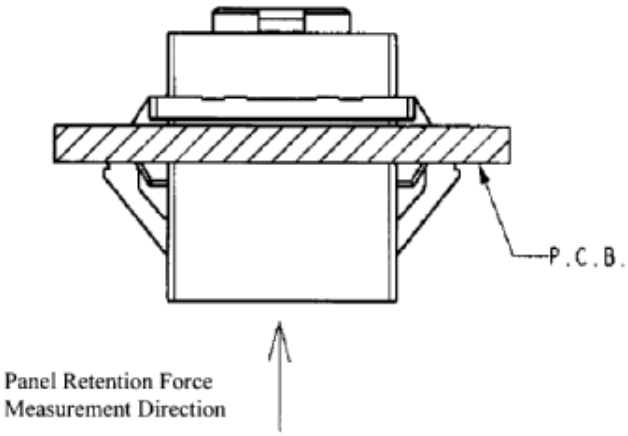
P.C.B.
Panel Retention Force
Measurement Direction

Fig. 8

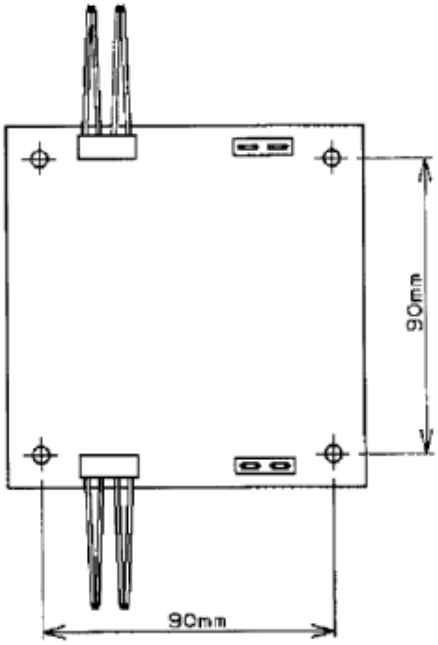

Fig. 9

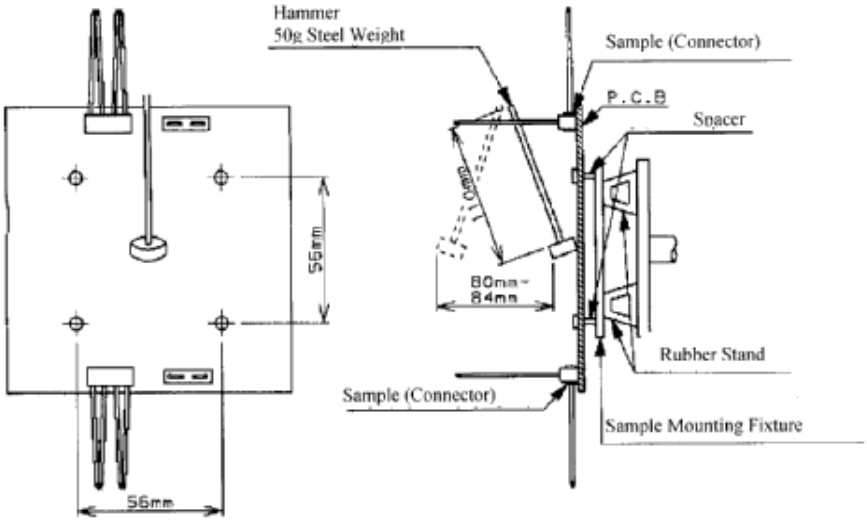

Hammer Weight Striking Frequency: 1 Strike/Second

Fig. 10

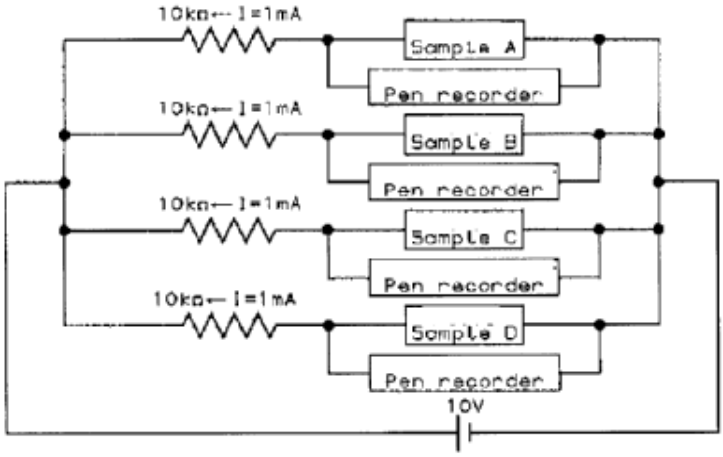

Fig. 11

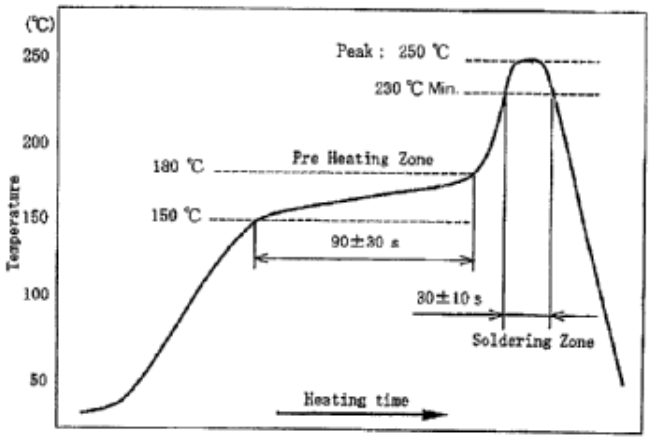

Measured at housing surface

Fig. 12

Initial and 30 Cycles

No. of Pos	Connector Mating/Unmating Force *Note		Connector Mating/Unmating Force (To be applied post header relay panel Mount type by measurement on lock side)	
	Mating Force N(kgf) Max.	Unmating Foce N(kgf) Min.	Mating Force N(kgf) Max.	Unmating Foce N(kgf) Min.
2	29.302 (2.99)	4.508 (0.46)	31.752 (3.24)	5.978 (0.61)
3	31.948 (3.26)	5.194 (0.53)	34.398 (3.51)	6.664 (0.68)
4	34.594 (3.53)	5.880 (0.60)	37.044 (3.78)	7.350 (0.75)
5	37.240 (3.80)	6.566 (0.67)	42.140 (4.30)	9.016 (0.92)
6	39.886 (4.07)	7.252 (0.74)	44.786 (4.57)	9.702 (0.99)
7	42.532 (4.34)	7.938 (0.81)	47.432 (4.84)	10.388 (1.06)
8	45.178 (4.61)	8.624 (0.88)	50.078 (5.11)	11.074 (1.13)
9	47.824 (4.88)	9.310 (0.95)	57.624 (5.88)	14.210 (1.45)
10	50.470 (5.15)	9.996 (1.02)	60.270 (6.15)	14.896 (1.52)
11	53.116 (5.42)	10.682 (1.09)	62.916 (6.42)	15.582 (1.59)
12	55.762 (5.69)	11.368 (1.16)	65.562 (6.69)	16.268 (1.66)
13	58.408 (5.96)	12.054 (1.23)	68.208 (6.96)	16.954 (1.73)
14	60.956 (6.22)	12.740 (1.30)	75.656 (7.72)	20.090 (2.05)
15	63.602 (6.49)	13.426 (1.37)	78.302 (7.99)	20.776 (2.12)
16	66.248 (6.76)	14.112 (1.44)	80.948 (8.26)	21.462 (2.19)
17	68.894 (7.03)	14.798 (1.51)	83.594 (8.53)	22.148 (2.26)
18	71.540 (7.30)	15.484 (1.58)	86.240 (8.80)	22.834 (2.33)
19	74.186 (7.57)	16.170 (1.65)	88.886 (9.07)	23.520 (2.40)
20	76.832 (7.84)	16.856 (1.72)	91.532 (9.34)	24.206 (2.47)
22	82.124 (8.38)	18.228 (1.86)	91.924 (9.38)	23.128 (2.36)
24	87.416 (8.92)	19.600 (2.00)	97.216 (9.92)	24.500 (2.50)
26	92.708 (9.46)	20.972 (2.14)	102.508 (10.46)	25.872 (2.64)
28	98.000 (10.00)	22.344 (2.28)	107.800 (11.00)	27.244 (2.78)
30	103.292 (10.54)	23.716 (2.42)	117.992 (12.04)	31.066 (3.17)
32	108.584 (11.08)	25.088 (2.56)	123.284 (12.58)	32.438 (3.31)
34	113.876 (11.62)	26.460 (2.70)	128.576 (13.12)	33.810 (3.45)
36	119.168 (12.16)	27.832 (2.84)	133.868 (13.66)	35.182 (3.59)
38	124.460 (12.70)	29.204 (2.98)	139.160 (14.20)	36.554 (3.73)
40	129.752 (13.24)	30.576 (3.12)	144.452 (14.74)	37.926 (3.87)

Note: To be applied same specification to post header relay panel mount type by measurement on opposite lock side.

Fig. 13

The application product descriptions and part numbers are as shown in Fig. 1

Product Part No.	Description
x-353293-x	Receptacle Assembly (MT Type) 2~20 Pos.
x-292207-x	Single Row Post Header Assembly (V) DIP Staggered Type with Boss with Kink 2~20 Pos.
x-292212-x	Single Row Post Header Assembly (V) SMT Type with Boss 3~20 Pos.
x-292230-x	Emboss Tape Packaged for Single Row Post Header Assembly (V) SMT Type with Boss 3~20 Pos.
x-292213-x	Single Row Post Header Assembly (V) SMT Type without Boss 3~20 Pos.
x-292231-x	Emboss Tape Packaged for Single Row Post Header Assembly (V) SMT Type without Boss 3~20 Pos.
x-292206-x	Single Row Post Header Assembly (H) DIP Staggered Type with Kink 2~20 Pos.
x-292215-x	Single Row Post Header Assembly Panel Mount Type 2~20 Pos.
x-353294-x	Double Row Holder Housing 22~40 Pos. (Only Ever Number Pos.)
x-292209-x	Single Row Post Header Assembly (H) SMT Type with Boss 2~20 Pos.
x-292227-x	Emboss Tape Packaged for Single Row Post Header Assembly (H) SMT Type with Boss 2~20 Pos.
x-292210-x	Single Row Post Header Assembly (H) SMT Type without Boss 2~20 Pos.
x-292228-x	Emboss Tape Packaged for Single Row Post Header Assembly (H) SMT Type without Boss 2~20 Pos.
x-292208-x	Double Row Post Header Assembly (V) DIP Staggered Type with Boss with Kink 22~40 Pos. (Only Even Number Pos.)
x-292211-x	Double Row Post Header Assembly (V) SMT Type with Boss 22~40 Pos. (Only Even Number Pos.)
x-292229-x	Emboss Tape Packaged for Double Row Post HDR Assembly (V) SMT Type with Boss 22~40 Pos. (Only Even Number Pos.)
x-292216-x	Double Row Post Header Assembly Panel Mount Type 22~40 Pos.
x-292262-x	Double Row Post Header Assembly (H) DIP Type 22~40 Pos.
x-292214-x	Single Row Post HDR Assembly (V) SMT Type with Polyimide Tape 3~20 Pos.
x-292232-x	Emboss Tape Packaged for Single Row Post HDR Assembly (V) SMT Type with Boss, Polyimide Tape 3~20 Pos.
x-2199235-x	Emboss Tape Packaged for Single Row Post HDR Assembly (V) SMT Type without Boss, Gold plating 3,5,10 Pos.

Fig. 1 (End)