DRAWING MADE IN THIRD ANGLE PROJECTION

680196 ⇔ 680196

<UT161B>DEPT2230>AMP07567>EDMMOD

PART NUMBER	REV	FIRST USED
680196-2	C	565435-5
680196-3	C	354500-1

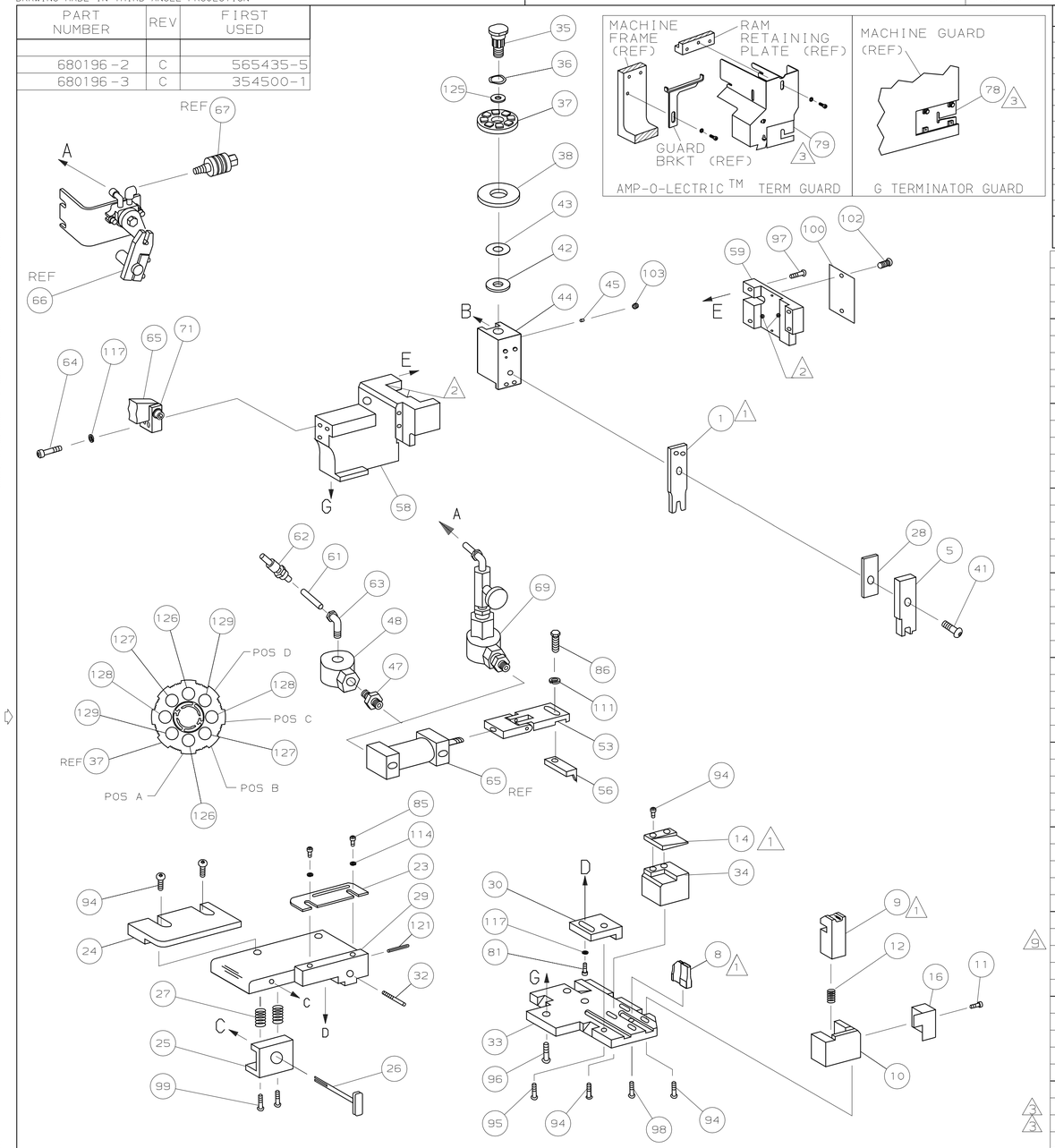

TERMINAL NAME: .125 BLADE, AMPLIVAR TM CONTACT 5

63870

CRIMPING DATA

PAD LTR	CRIMP HEIGHT	WIRE SIZE CMA (8)
A	.072 ±.002 [1.83 ±0.05mm]	4400-5000 1(17)+1(16 1/2)
B	.067 ±.002 [1.70 ±0.05mm]	3400-4200 (14)
C	.062 ±.002 [1.57 ±0.05mm]	2400-3200 (16)
D	.057 ±.002 [1.45 ±0.05mm]	1400-2200 (18)

CRIMP	SIZE	TYPE	RANGE
WIRE	.110 [2.79mm]	F	1400-5000 CMA
INSUL	-	-	-

WIRE STRIP LENGTH	TERM APPL SPEC	FEED	APPL INSTRUCTION	SET UP GAGE	LAYOUT
-	-	.500	408-8040	458637-1	L1672

QTY REQD PER ASSY					PARTS LIST		
2	2		-	C	2-354779-0	PIN, WIRE DISC (.3090)D	129
2	2		-	C	1-354779-1	PIN, WIRE DISC (.3045)C	128
2	2		-	C	354779-3	PIN, WIRE DISC (.3005)B	127
2	2		-	C	8-354778-7	PIN, WIRE DISC (.2930)A	126
1	1		-	A	986950-1	WASHER, FLAT PRECISION	125
							124
							123
							122
1	1		-	A	4-21028-0	PIN,SLT SPR(ø.093x.75)ST GDE PL	121
							120
							119
							118
3	3		-	A	21024-5	WASHER, LOCK(#10)ADJ BLOCK	117
							116
							115
2	2		-	A	21024-2	WASHER,LOCK(#4)FRONT STP GUIDE	114
							113
							112
1	1		-	A	21024-4	WASHER, LOCK (#8)	111
							110
							109
							108
							107
							106
							105
							104
1	1		-	A	21009-2	SCR,SKT SET(1/4-20x.25 LW)RAM	103
2	2		-	A	21017-2	SCR,DRIVE(#2x.19)ID PLATE	102
							101
1	1		-	B	461264-1	PLATE, IDENTIFICATION	100
2	2		-	A	3-21002-0	SCR,BHC(10-32x.88)DRAG	99
1	1		-	A	22733-8	SCR,BHC(8-32x.38 LW)ANVIL	98
4	4		-	A	2-21002-9	SCR,BHC(10-32x.75)CAP	97
3	3		-	A	2-22733-8	SCR,BHC(1/4-20x.62)HOUSING	96
1	1		-	A	2-21002-7	SCR,BHC(10-32x.50)SG ADJ BLOCK	95
8	8		-	A	2-21002-2	SCR,BHC(8-32x.50)TERM H DWN	94
							93
							92
							91
-	1		-	A	22317-3	ELBOW,METAL T .25T-1/8 NPT	90
1	1		-	B	689446-2	AIR BLAST TUBE	89
1	-		-	A	23545-1	CLAMP, WIRE	88
-	1		-	C	455350-1	AIR BLAST ASSEMBLY	87
1	1		-	A	2-22603-0	SCR,HEX HD(8-32x.31)FEED FINGER	86
2	2		-	A	1-21000-3	SCR,SHC(4-40x.25)F ST GUIDE	85
							84
							83
							82
1	1		-	A	3-21000-4	SCR,SHC(10-32x.38)SG ADJ BL	81
							80
-	REF		-	B	455749-1	GUARD, WINDOW	79
REF	-		-	B	679532-1	INSERT, GUARD	78
							77
							76
							75
							74
							73
							72
1	1		-	B	459610-3	MOUNT, FEED BRACKET	71
-3	-2		U/M	DWG SIZE	PART NO	DESCRIPTION	ITEM NO

QTY REQD PER ASSY					PARTS LIST		
	-2		BENCH MODEL K			AIR FEED	
	-3		BENCH MODEL G			AIR FEED	
							70
4 -	1		-	C	692655-5	AIR FEED VALVE ASSY	69
							68
-	REF		-	A	24042-2	VALVE, SHUT OFF	67
4 -	REF		-	C	692655-6	AIR FEED VALVE ASSY	66
4 1	1		-	B	461065-1	AIR FEED ASSY (1 INCH)	65
2	2		-	A	3-21000-7	SCR,SHC(10-32x.75)AIR ASSY	64
1	-		-	A	983427-6	ELBOW, SWIVEL 1/8 NPT - 1/4 T	63
2	-		-	A	23238-1	QUICK DISCONNECT	62
6.00	-		IN	A	27319-4	TUBING, POLY-FLO ø.25	61
2.00	-		IN	A	27319-3	TUBING, POLY-FLO ø.38	60
1	1		-	C	454220-1	CAP, RAM	59
1	1		-	D	454485-1	HOUSING	58
							57
1	1		-	B	690542-2	PAWL, FEED	56
							55
							54
4 1	1		-	B	461062-1	FEED FINGER ASSY	53
							52
							51
							50
							49
1	-		-	A	22374-7	VALVE, QUICK EXHAUST	48
1	-		-	A	22304-1	NIPPLE, HEX 1/8 NPT	47
							46
1	1		-	A	690191-1	PLUG, NYLON	45
1	1		-	C	455673-1	RAM	44
1	1		-	A	690125-1	WASHER, LAMINATED	43
1	1		-	A	690124-1	WASHER, RAM	42
1	1		-	A	7-21002-9	BOLT, CRIMPER(5/16x1.00)	41
							40
							39
1	1		-	A	690223-2	SPACER, INSULATION DISC	38
1	1		-	D	354777-1	WIRE DISC, PLASTIC	37
1	1		-	A	22480-5	WASHER, SPRING	36
1	1		-	B	690212-1	POST, RAM	35
1	1		-	C	318548-1	SUPPORT, SHEAR	34
1	1		-	D	455675-1	PLATE, BASE	33
1	1		-	A	690432-3	SCREW, ADJUSTMENT	32
							31
1	1		-	B	455689-1	BLOCK, STRIP GUIDE ADJ	30
1	1		-	C	455671-1	PLATE, STRIP GUIDE	29
1	1		-	C	1-455888-5	SPACER, FRONT SHEAR DEP	28
2	2		-	A	1-22284-0	SPRING, DRAG	27
1	1		-	B	690546-1	LEVER, DRAG RELEASE	26
1	1		-	B	240792-1	DRAG, TERMINAL	25
1	1		-	D	6-690504-3	GUIDE, STRIP (REAR)	24
1	1		-	A	690438-1	GUIDE, STRIP (FRONT)	23
							22
							21
							20
							19
							18
							17
1	1		-	B	318563-1	GUARD, CHIP, FRONT	16
							15
1 1	1		-	C	318547-1	SHEAR PLATE, WIRE	14
							13
1	1		-	A	5-22280-0	SPRING, SHEAR	12
1	1		-	B	690461-1	STOP, SHEAR	11
1	1		-	C	690459-1	HOLDER, SHEAR (FRONT)	10
1 1	1		-	C	454276-1	SHEAR, FLOAT (FRONT)	9
1 1	1		-	C	805840-9	ANVIL	8
							7
							6
1	1		-	C	1-455889-3	DEPRESSOR, SHEAR (FRONT)	5
							4
							3
							2
1 1	1		-	C	318542-1	CRIMPER, WIRE	1
-3	-2		U/M	DWG SIZE	PART NO	DESCRIPTION	ITEM NO

← REVISION OF EACH ASSY NO (WHEN BLANK, USE DWG REVISION)

1. RECOMMENDED SPARE PARTS.
2. GREASE LIGHTLY.
3. GUARD MUST BE IN PLACE WHEN OPERATING APPLICATOR IN A BENCH MACHINE.
4. SEE DRAWING FOR COMPONENTS
5. WITH WIRE TRIM FEATURE
6. CENTER ITEM 60 BETWEEN ITEM 61 AND ITEM 89. ATTACH ITEM 60 TO ITEM 89 AND ITEM 61 USING ADHESIVE PN 28829-2.
7. INSTALL ITEM 88 TO ITEM 58 USING ITEM 84.
8. SET-UP ONLY
9. CUT TO 7 INCHES AT ASSY.

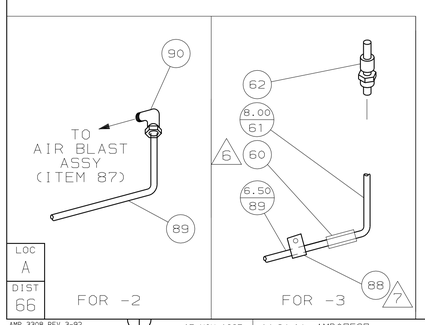

P	F	LTR	REVISION RECORD	APP	DATE
		C	0150-8105-97	TB	11-97
		B	0150-7137-96	CE	8-96
		A1	0150-6605-96	CE	1-96
		A	REVISED	MO	11-95

DIMENSIONS IN INCHES. DO NOT SCALE PRINT.
TOLERANCES UNLESS OTHERWISE SPECIFIED:
2 PLC DEC ±-
3 PLC DEC ±-
4 PLC DEC ±-
ANGLES ± -
SURF TEXTURE: √
REMOVE BURRS, BREAK SHARP EDGES R.015 MAX

MATL - -	HT TR - -	FIN - -	
DR J.BAKER 9/22/95	APP 9/22/95 A BEDDICK	AMP Incorporated Harrisburg, PA 17105-3608	
CHK 9/22/95 C.ERISMAN	REL 12/20/95 B. MORGAN		
NAME SIDE FEED HDM APPLICATOR		MACHINE REF MINI APPL	
SCALE -	D	DWG NO 680196	SHEET 1 OF 1	REV C

THIS INFORMATION IS CONFIDENTIAL AND IS DISCLOSED TO YOU ON CONDITION THAT IT IS NOT TO BE DISCLOSED TO OTHERS OTHER THAN AMP PERSONNEL WITHOUT WRITTEN AUTHORIZATION FROM AMP INCORPORATED, HARRISBURG, PA.

THIS DRAWING IS A CONTROLLED DOCUMENT FOR AMP INCORPORATED. IT IS SUBJECT TO CHANGE AND THE CONTROLLING ENGINEERING ORGANIZATION SHOULD BE CONTACTED FOR THE LATEST REVISION.