© 2021 TE Connectivity. All Rights Reserved.

PART NUMBER	REV	DESCRIPTION
2380200-1	C	HV DIE SET
7-2380200-7	A	CRIMP TOOLING KIT
9-2380200-1	C	DIE SET WITH DIE HOLDER

Active

REVISIONS

P	LTR	DESCRIPTION	DATE	DWN	APVD
	A	RELEASED	13APR2021	KH	YY
	B	ECR-22-127503	24JAN2022	KH	YY
	C	ECR-22-143400	23JUN2022	KH	YY
	C1	REVISED PER ECR-22-148005	01AUG2022	GK	YY

TERMINAL NAME	PCON 21 CONTACT 180 DEG	
TE TERMINAL PART NUMBER(S)	2317680-2 △6	
APPLICATION SPECIFICATION	114-94511	
	114-160072(REF)	
USED ON	2305470-1	2326378-1
INSTRUCTION SHEET	408-35310	

CABLE SUPPLIER/ SPECIFICATION	CABLE SIZE	CRIMP HEIGHT	CRIMP HEIGHT REFERENCE SETTING
LV216-2 CABLE (WITH SHIELD)	95mm²	9.6±0.15	C2
	70mm²	8.6±0.15	E3

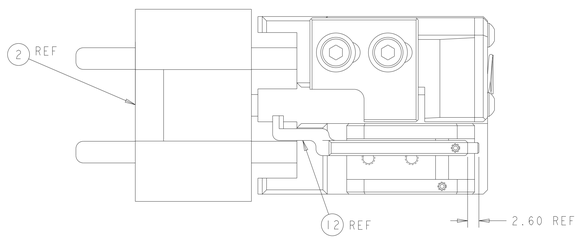

TERMINAL CATCH SET-UP DIMENSION
SCALE 2:1

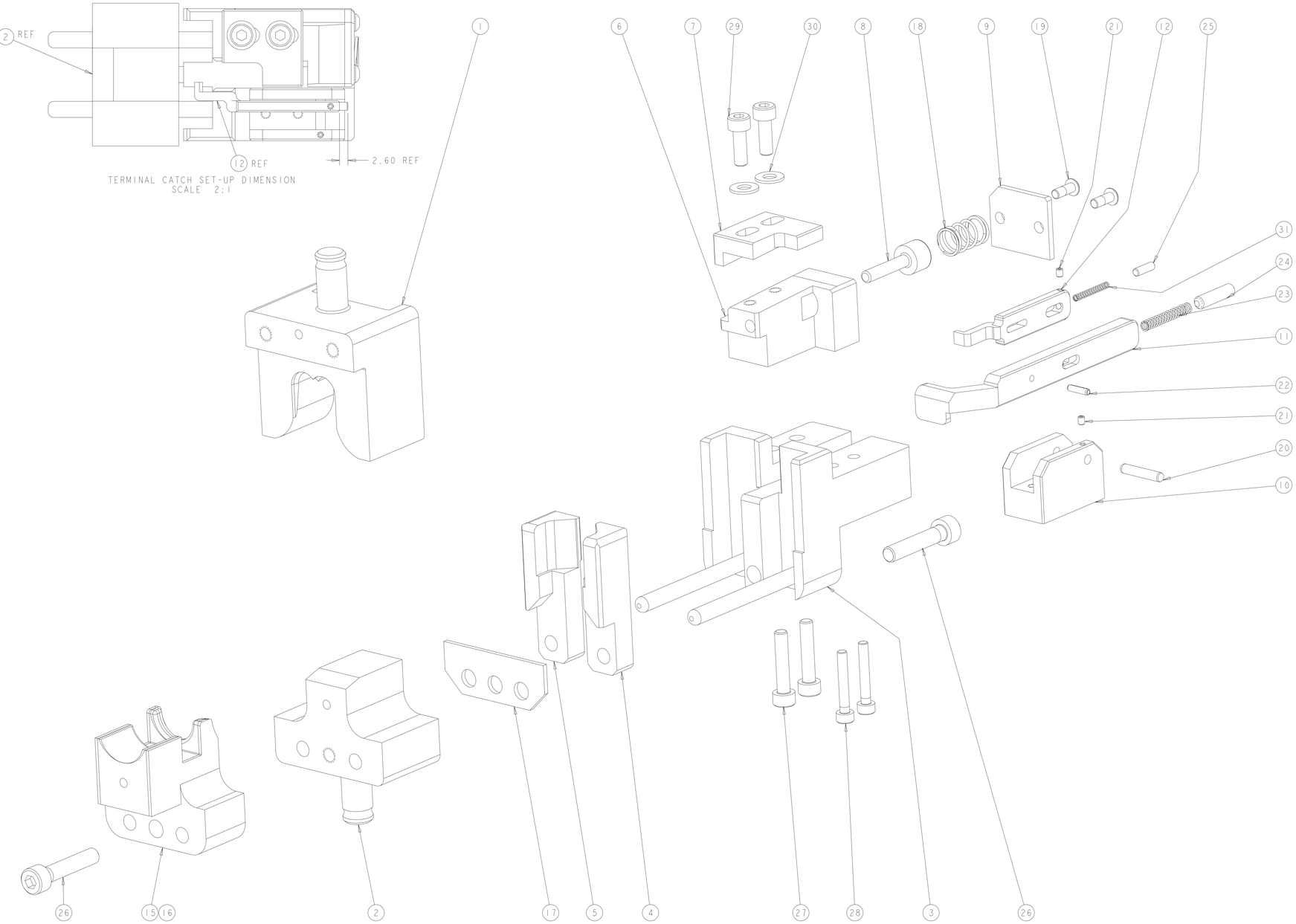

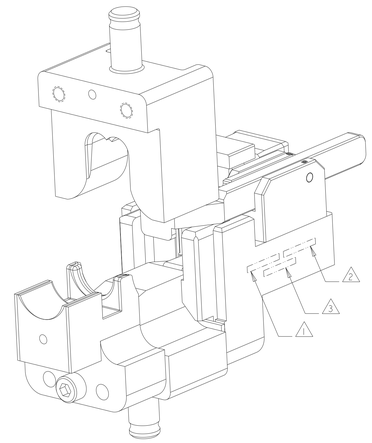

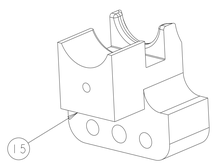

△5 95mm²

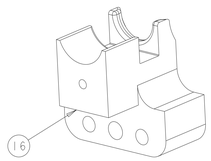

△5 70mm²

1	-	-	2305470-1	HV DIE HOLDER WITH FINE ADJUST	100
1	-	1	1-2234018-9	SPRING, COMPRESSION	31
2	-	2	1-18028-2	WASHER, FLAT, REG M4	30
2	-	2	1-18023-2	SCR, SKT HD CAP M4 X 12.0	29
2	-	2	18023-7	SCR, SKT HD CAP M3 X 20.0	28
2	-	2	1-18023-4	SCR, SKT HD CAP M4 X 20.0	27
2	-	2	2-18023-2	SCR, SKT HD CAP M5 X 25.0	26
1	-	1	1-519011-6	SCR, SET, FLT POINT, M2.5x8	25
1	-	1	3-18032-6	SCR, SET, FLT PNT, M4 X 16.0	24
1	-	1	2356858-1	SPRING, COMPRESSION	23
1	-	1	3-993111-2	PIN, SLOTTED SPRING 2.0 X 8.0	22
2	-	2	2-18031-2	SCR, SET, CUP POINT M2 X 2.5	21
1	-	1	992946-2	PIN, DOWEL 3 X 16	20
2	-	2	18024-2	SCR, BTN SKT HD CAP (M3 X 8.0)	19
1	-	1	1-22282-2	SPRING, COMPRESSION	18
1	-	1	2376855-1	SPACER, LOCATOR HOUSING	17
△5 1	-	1	2400423-2	LOCATOR, INSULATION LOWER	16
△5 1	-	1	2400423-1	LOCATOR, INSULATION LOWER	15
1	-	1	2375511-1	TERMINAL CATCH	12
1	-	1	2375513-1	WIRE STOP	11
1	-	1	2375517-1	WIRE STOP MOUNT	10
1	-	1	2375512-1	SPRING PLATE	9
1	-	1	2305821-3	PIN, EXTRUSION -	8
1	-	1	2380286-2	TERMINAL HOLDER CAP	7
1	-	1	2375510-1	TERMINAL HOLD DOWN	6
1	-	1	2375508-1	SIZE PUNCH LEFT	5
1	-	1	2375509-1	SIZE PUNCH RIGHT	4
1	-	1	2375515-3	HOUSING, LOCATOR	3
1	1	1	1-2305823-1	ANVIL HVM F	2
1	1	1	2380365-1	CRIMPER HVM F	1
-91	-77	-1	PART NO	DESCRIPTION	ITEM NO

△1 APPLY "DIE SET PN" PER TEC-115-67-2 IN APPROXIMATE AREA SHOWN.

△2 IDENTIFY PART NUMBER AND REVISION LETTER PER TEC-115-67-2 IN APPROXIMATE AREA SHOWN.

△3 IDENTIFY SERIAL NUMBER PER TEC-115-67-2 IN APPROXIMATE AREA SHOWN.

4. TORQUE RECOMMENDATIONS PER 101-35000 UNLESS OTHERWISE SPECIFIED.

△5 ITEMS 15 TO BE USED WITH 95mm² CABLE.
ITEMS 16 TO BE USED WITH 70mm² CABLE.

△6 FOR THE SAME TERMINAL WHEN APPLIED CABLE WITHOUT SHIELD USE DIE SET 2359747-1. ORDER BELOW PART COULD CONVERT TO 2359747-1.

95MM² 2366587-1 & 2366588-1
70MM² 2366587-2 & 2366588-2

THIS DRAWING IS A CONTROLLED DOCUMENT.

DIMENSIONS: MM

TOLERANCES UNLESS OTHERWISE SPECIFIED: 0 PLC ±; 1 PLC ±; 2 PLC ±; 3 PLC ±; 4 PLC ±; ANGLES ±

MATERIAL - -

FINISH - -

DWN	J.LI	25SEP2019
CHK	Y.YIN	25SEP2019
APVD	Y.YIN	25SEP2019

PRODUCT SPEC -

APPLICATION SPEC - -

WEIGHT -

TE Connectivity

NAME DIE SET PCON 21-180 SHD T 70-95MM2 LIFTED

SIZE	CAGE CODE	DRAWING NO	RESTRICTED TO
A0	00779	C-2380200	

CUSTOMER ACCESSIBLE PRODUCTION DRAWING

SCALE 2:1 SHEET 1 OF 1 REV C1

4806 (3/13)