THIS DRAWING IS UNPUBLISHED. RELEASED FOR PUBLICATION 20
© COPYRIGHT 20 BY TYCO ELECTRONICS CORPORATION. ALL RIGHTS RESERVED.

LOC	DIST
A	66

REVISIONS

P	LTR	DESCRIPTION	DATE	DWN	APVD
	C	ECR-18-018247	21NOV2018	FL	CT
	D	ECR-18-019285	11DEC2018	MZ	CT
	E	ECR-22-155582	14OCT2022	FZ	TE
	E1	ECR-24-222083	26SEP2024	SS	TE

PART NUMBER	REVISION	DESCRIPTION	FEED TYPE
2151679-1	D	FINE CRIMP HEIGHT ADJUST	MECHANICAL
2151679-2	E	FINE CRIMP HEIGHT ADJUST	PNEUMATIC
7-2151679-7	D	CRIMP TOOLING KIT	-

ATLANTIC VERSION TERMINATOR INTERFACE ADAPTER

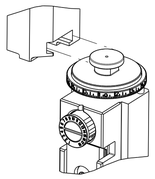

APPLICATOR DATA		
CRIMP	SIZE	TYPE
WIRE	1.00 mm [.039]	F
INSUL	1.07 mm [.042]	O
APPLICATOR INSTRUCTIONS 408-35042		

TERMINAL DATA: TE TERMINAL		TE CRIMP SPECIFICATION
TERMINAL NAME: CONTACT, FEMALE,UNSEALED, 0.50 SERIES		
WIRE STRIP LENGTH 3.00-3.50 mm [.118-.138 IN]		INSULATION DIAMETER RANGE ∅0.85-1.05 mm [.033-.041 IN]
TERMINAL APPLICATION SPECIFICATION	114-5379	- - - -
TERMINALS APPLIED 6 7		
TE TERMINAL	TE TERMINAL	TE TERMINAL TE TERMINAL
1827855-4		

WIRE SIZE	CRIMP HEIGHT mm [INCH]	CRIMP HEIGHT REFERENCE SETTING 4
0.22mm2	0.64+/-0.02 [.025+/-.001]	7.1
0.13mm2	0.57+/-0.05 [.022+/-.002]	7.8

TERMINAL DATA: TE TERMINAL		TE CRIMP SPECIFICATION
TERMINAL NAME: CONTACT, FEMALE,UNSEALED, 0.50 SERIES		
WIRE STRIP LENGTH 3.00-3.50 mm [.118-.138 IN]		INSULATION DIAMETER RANGE ∅0.85-0.95 mm [.033-.037 IN]
TERMINAL APPLICATION SPECIFICATION	114-78061-1	- - - -
TERMINALS APPLIED 6 7		
TE TERMINAL	TE TERMINAL	TE TERMINAL TE TERMINAL
2356389-1		

WIRE SIZE	CRIMP HEIGHT mm [INCH]	CRIMP HEIGHT REFERENCE SETTING 4
0.13mm2	0.57+/-0.03 [.022+/-.001]	7.8

1. RECOMMENDED SPARE PARTS
2. REFER TO SUPPLIED INSTRUCTION SHEET FOR CLEANING, LUBRICATION AND STORAGE OF APPLICATOR.
3. APPLY PART NUMBER 1-23419-5 LOCTITE TO THREADS OF ITEM 180. APPLY PART NUMBER 2-23419-6 LOCTITE TO THREADS OF ITEM 242.
4. CRIMP HEIGHT REFERENCE SETTING WAS THE SETTING USED WHEN THE APPLICATOR WAS QUALIFIED AT THE FACTORY. ADJUSTMENT MAY BE NECESSARY WHEN RUNNING APPLICATOR IN THE FIELD.
5. UNLESS SPECIFIED OTHERWISE TORQUE VALUES SHALL BE USED PER DOCUMENT, 101-35000.
6. FEED ADJUSTMENT REQUIRED WHEN CHANGING TERMINAL APPLIED.
7. TERMINAL LUBRICANT IS RECOMMENDED.

*WARNING
ON INSTALLATION, SET WIRE DISC TO CRIMP HEIGHT REFERENCE SETTING FOR LARGEST WIRE SIZE. CRIMP HEIGHT REFERENCE SETTINGS GREATER THAN THE VALUE SHOWN MAY CAUSE DAMAGE TO THE CRIMP TOOLING, REFER TO THE INSTRUCTION SHEET FOR PROPER SETUP AND ADJUSTMENTS.

-77	-72	-71	-2	-1	PART NO	DESCRIPTION	ITEM NO
-	1	-	1	-	2119641-1	FEED CAM, AIR FEED	248
-	1	1	1	1	2119082-8	CAM, SNAIL, INSULATION ADJUSTMENT	244
-	1	1	1	1	2079764-1	WASHER, WAVE SPRING, CREST-TO-CREST	243
3 -	1	1	1	1	2119083-1	RETAINER, INSULATION DIAL	242
-	1	1	1	1	7-18023-7	SCR, SKT HD CAP M3 X 4.0	241
-	-	1	-	1	2119580-1	MECHANICAL FEED ASSEMBLY	239
-	1	-	1	-	2844940-1	AIR FEED MODULE	238
-	2	2	2	2	1-2079383-0	SCR, BHSC, RoHS (M3 X 6)	230
3 -	1	1	1	1	1-1752354-8	STANDOFF,HOLD-DOWN	180
-	1	1	1	1	1976053-9	LOCATER BLOCK,TERMINAL	179
-	1	1	1	1	993111-1	PIN, SLOTTED SPRING 3.0 X 20.0	177
-	1	1	1	1	8-22280-7	SPRING, COMPRESSION	176
-	1	1	1	1	1752353-2	GUIDE PIN,HOLDDOWN	175
-	1	1	1	1	1901680-2	GUIDE PIN,HOLDDOWN	174
-	REF	REF	REF	REF	994970-2	COUNTER, MAGNETIC	164
7 -	1	1	1	1	2119955-1	ASSY, LUBRICATOR, SIDE FEED	113
-	1	1	1	1	2844908-1	SCREW, LOCKING	99
-	1	1	1	1	2844907-1	POST, LOCKING	98
-	1	1	1	1	455888-8	SPACER, CRIMPER -	82
-	1	1	1	1	5-547505-2	SPRING, COMPRESSION	77
-	1	1	1	1	854769-4	HOLDER, INS	74
-	1	1	1	1	1803607-3	DOCUMENTATION PACKAGE	71
-	1	1	1	1	2119740-1	TAG,IDENTIFICATION	67
-	2	2	2	2	2168078-1	SCREW, DRIVE, RH, RoHS, 2 x .188	66
-	1	1	1	1	2168083-2	SCR, SKT HD CAP, RoHS, M4 X 8.0	60
-	1	1	1	1	5-18022-5	SCR, HEX HD CAP, M4 X 6.0	59
-	1	1	1	1	21028-2	PIN, SLOTTED SPRING .062 X .250	58
-	1	1	1	1	1338685-1	PAWL, FEED	56
-	4	4	4	4	2168083-3	SCR, SKT HD CAP, RoHS, M4 X 12.0	54
-	1	1	1	1	1-5018030-0	NUT, HEX, REG, RoHS, M3.5	52
-	1	1	1	1	1901681-4	HOLDDOWN, TERMINAL	51
-	1	2	1	2	18023-9	SCR, SKT HD CAP M4 X 6.0	49
-	-	1	-	1	2119652-1	FEED CAM, PRE FEED	48
-	-	1	-	1	2119653-1	FEED CAM, POST FEED	47
-	1	1	1	1	1803583-9	APPLICATOR BASIC ASSEMBLY, SF	46
-	1	1	1	1	1803515-3	RAM ASSEMBLY, SF ATLANTIC	44
-	1	1	1	1	1803602-1	SCR, BHSC, RoHS (M8 X 25)	41
-	1	1	1	1	1-1752356-6	SUPPORT, TERMINAL	34
-	2	2	2	2	2079383-5	SCR, BHSC, RoHS (M4 X 20)	33
-	2	2	2	2	2-2844962-3	SPACER, CYLINDRICAL, STRIP GUIDE	30
-	1	1	1	1	2844992-1	ASSEMBLY, STRIP GUIDE -	29
-	1	1	1	1	455888-3	SPACER, CRIMPER -	28
-	1	1	1	1	1320928-2	STRIP GUIDE -	24
-	1	1	1	1	2168083-2	SCR, SKT HD CAP, RoHS, M4 X 8.0	21
-	2	2	2	2	1-18028-2	WASHER, FLAT, REG M4	20
-	1	1	1	1	2119533-1	STRIPPER, SIDE FEED	19
1 -	1	1	1	1	2119806-1	INSERT, SHEAR	13
-	1	1	1	1	3-22280-3	SPRING, COMPRESSION	12
-	1	1	1	1	1-356885-4	STOP, SHEAR	11
1 -	1	1	1	1	2119805-1	SHEAR HOLDER, FRONT -	10
1 -	1	1	1	1	1633861-1	SHEAR, FLOATING	9
1 1	2	2	1	1	3-1633711-1	ANVIL, COMBINATION	8
-	-	-	-	-	-	-	7
-	-	-	-	-	-	-	6
-	1	1	1	1	2119780-9	DEPRESSOR, SHEAR -	5
-	1	1	1	1	3-238011-8	BLOCK, CRIMPER SPACER	4
1 1	2	2	1	1	1633966-3	CRIMPER, INSULATION O	3
-	-	-	-	-	-	-	2
1 1	2	2	1	1	2-937157-8	CRIMPER, WIRE SPECIAL	1

THIS DRAWING IS A CONTROLLED DOCUMENT FOR TYCO ELECTRONICS CORPORATION. IT IS SUBJECT TO CHANGE AND THE CONTROLLING ENGINEERING ORGANIZATION SHOULD BE CONTACTED FOR THE LATEST REVISION.

DIMENSIONS: mm

TOLERANCES UNLESS OTHERWISE SPECIFIED:
0 PLC ±-
1 PLC ±-
2 PLC ±-
3 PLC ±-
4 PLC ±-
ANGLES ±-

MATERIAL - -
FINISH - -

DWN	K.HUANG	17JUN2013
CHK	L.ZHANG	17JUN2013
APVD	U.GUO	17JUN2013
PRODUCT SPEC	-	
APPLICATION SPEC	-	
WEIGHT	-	

TE Connectivity
Harrisburg, PA 17105-3608

NAME: Ocean Side Feed Applicator -

SIZE	CAGE CODE	DRAWING NO	RESTRICTED TO
A1	00779	C-2151679	-

Customer Accessible Production Drawing | SCALE 1:2 | SHEET 1 OF 4 | REV E1

SHEETS 3 & 4 ARE NOT REQUIRED FOR ATLANTIC VERSION

THIS DRAWING IS UNPUBLISHED. RELEASED FOR PUBLICATION 20
© COPYRIGHT 20 BY TYCO ELECTRONICS CORPORATION. ALL RIGHTS RESERVED.

LOC	DIST
A	66

REVISIONS

P	LTR	DESCRIPTION	DATE	DWN	APVD
	-	SEE SHEET 1	-	-	-

FEED TYPE MECHANICAL

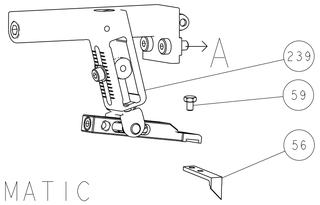

PNEUMATIC

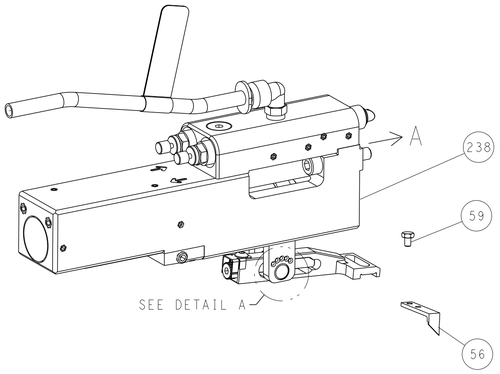

FEED SPRING SETTING POSITION
(SHOWN FROM REAR SIDE)

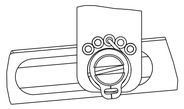

DETAIL A

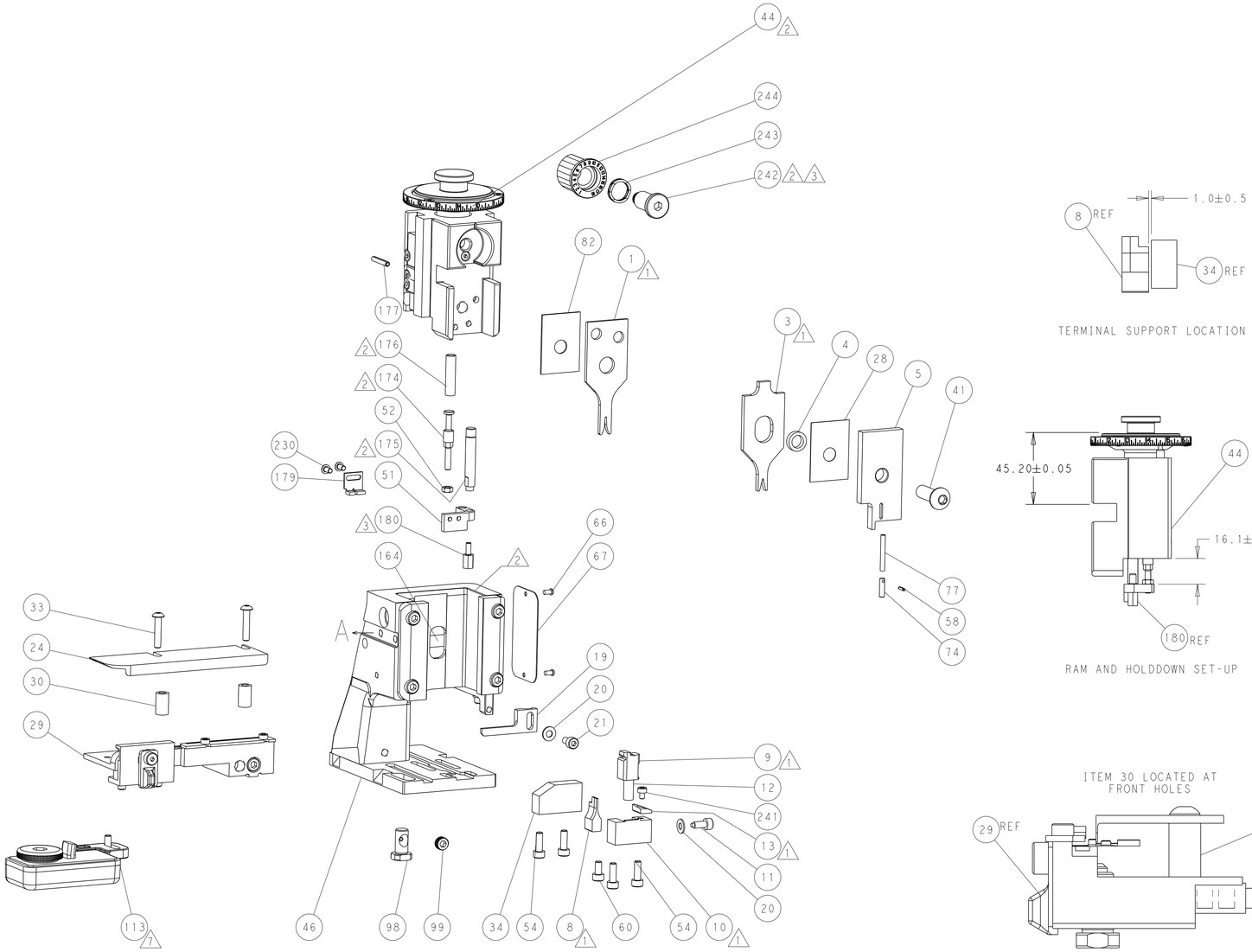

TERMINAL SUPPORT LOCATION

RAM AND HOLDDOWN SET-UP

ITEM 30 LOCATED AT
FRONT HOLES

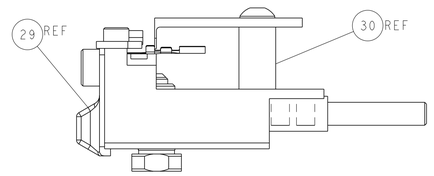

FEED TRACK POSITION
GUIDE BY INSULATION BARREL

CAM POSITIONS

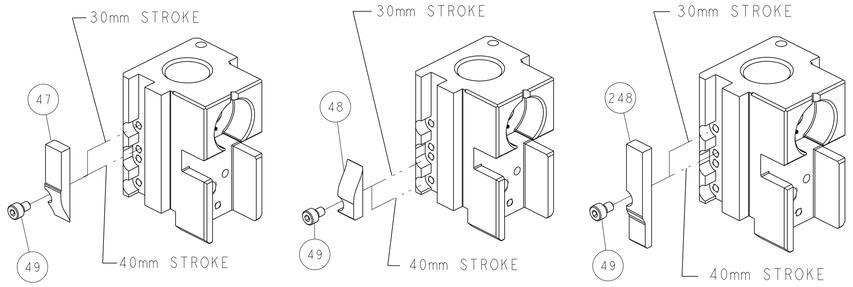

MECHANICAL
POST FEED

MECHANICAL
PRE FEED

AIR FEED

THIS DRAWING IS A CONTROLLED DOCUMENT FOR TYCO ELECTRONICS CORPORATION
IT IS SUBJECT TO CHANGE AND THE CONTROLLING ENGINEERING ORGANIZATION
SHOULD BE CONTACTED FOR THE LATEST REVISION

DWN	K.HUANG	17JUN2013
CHK	L.ZHANG	17JUN2013
APVD	U.GUO	17JUN2013
PRODUCT SPEC	-	
APPLICATION SPEC	-	
WEIGHT	-	

TE Connectivity
Harrisburg, PA 17105-3608

NAME: Ocean Side Feed Applicator -

DIMENSIONS: mm

TOLERANCES UNLESS OTHERWISE SPECIFIED:
0 PLC ±-
1 PLC ±-
2 PLC ±-
3 PLC ±-
4 PLC ±-
ANGLES ±-

MATERIAL - -
FINISH - -

SIZE	CAGE CODE	DRAWING NO	RESTRICTED TO
A1	00779	C-2151679	-

Customer Accessible Production Drawing | SCALE 1:2 | SHEET 2 OF 4 | REV E1

AMP 4805 REV 31MAR2000

SHEETS 3 & 4 ARE NOT REQUIRED FOR ATLANTIC VERSION