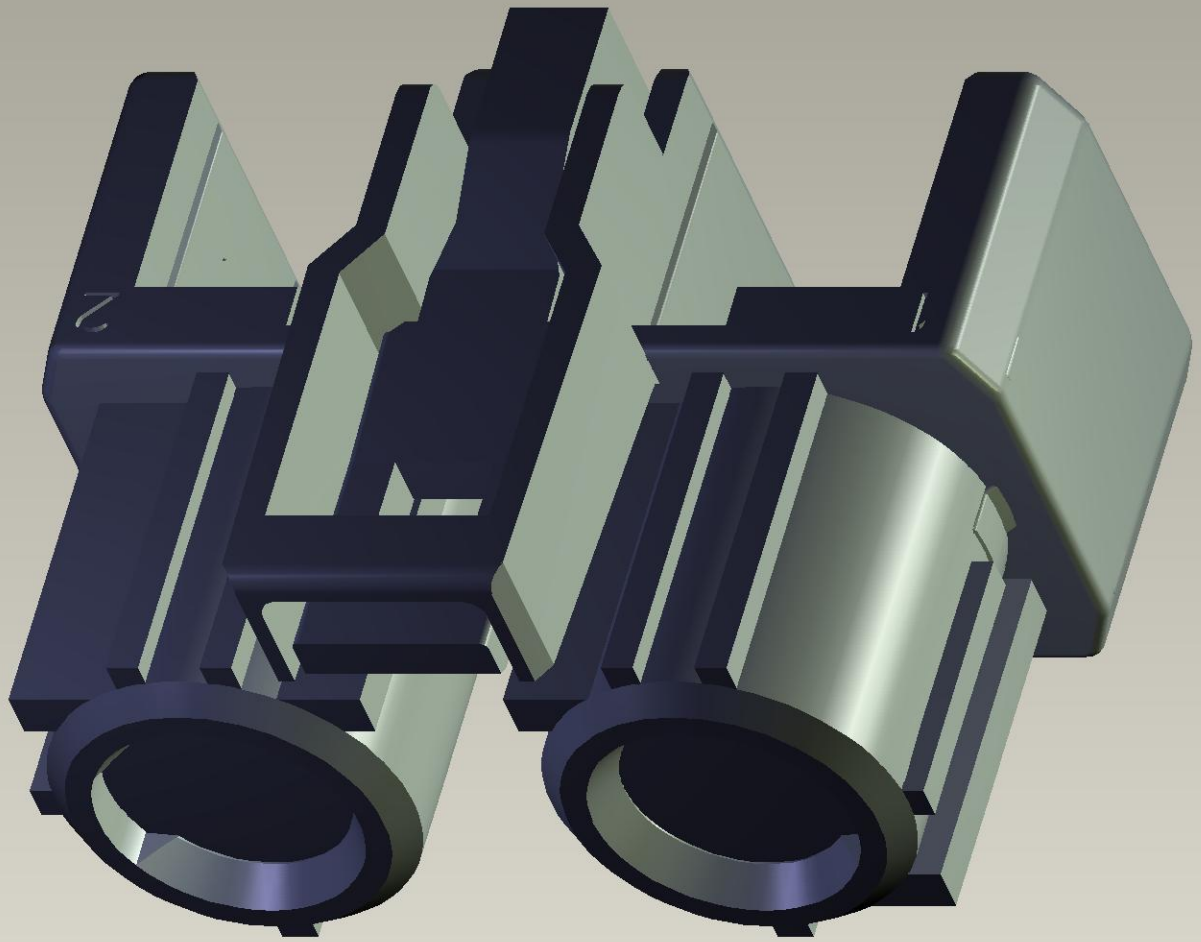

Instance:C-1-2236888-2.PRT