ISSUE	DESCRIPTION	DRAWN	DATE	APPR
B	CR A 0285	IRT	FEB 00	KJW
C	PER ECO-08-029441		Nov/24/08	M.P.

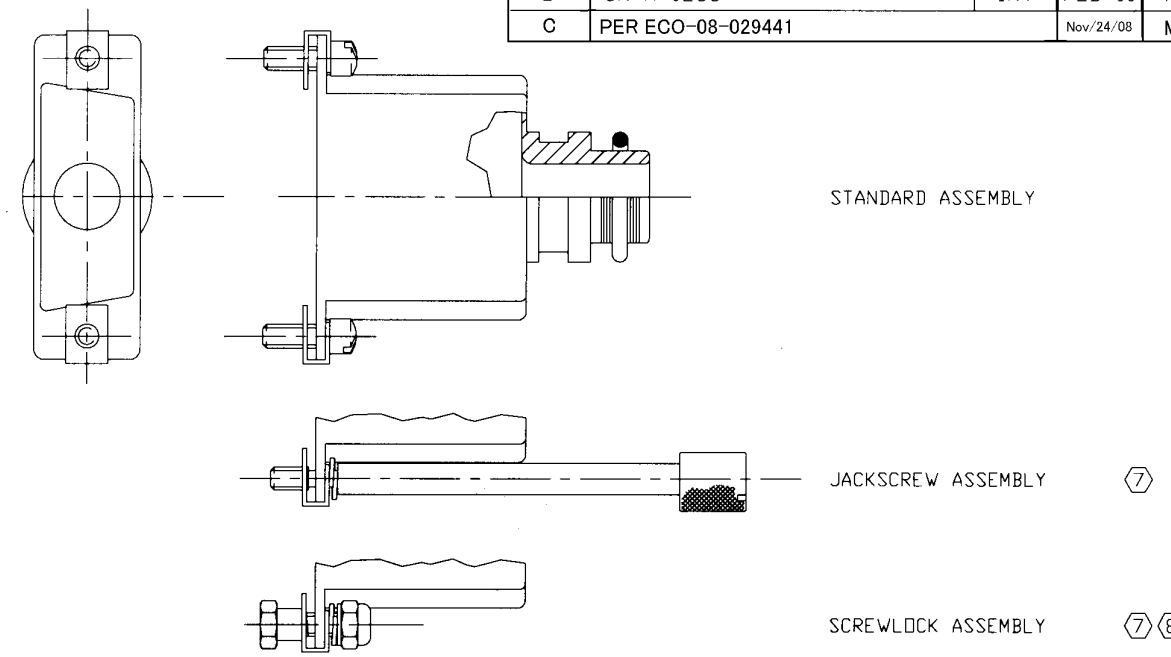

D-SUBMINIATURE TINEL-LOCK ADAPTER

NOTES

1. THIS PRODUCT IS DESIGNED TO TERMINATE A BRAIDED CABLE SHIELD AND A HEAT SHRINKABLE LIPPED BOOT TO A D-SUBMINIATURE CONNECTOR - SEE NOTE 6.

2. SEE SHEETS 2, 3 AND 4 FOR TABLES OF DIMENSIONS, AND SHEET 5 FOR PART NUMBERING SYSTEM AND ORDERING INFORMATION.

3. SEE DRAWING TR FOR DETAIL ON TINEL-LOCK RING. RINGS ARE DESIGNED TO BE HEATED ELECTRICALLY. ALL RINGS ARE MARKED WITH THERMOCHROMIC PAINT WHICH CHANGES COLOUR WHEN INSTALLATION TEMPERATURE IS REACHED.

4. ADAPTER TO BE PERMANENTLY MARKED WITH CODE IDENTIFICATION NUMBER AND PART NUMBER LESS RING DESIGNATOR. (e.g. 06090 TXS55-AC00-1505). RINGS SHALL BEAR NO MARKING.

5. TINEL-LOCK RING IS TO BE SPECIFIED IN PART NUMBER WHEN ORDERING.

6. ADAPTER MATES TO MIL- DTL -24308 SERIES CONNECTORS.

7. ALTERNATIVE FASTENING HARDWARE SUPPLIED FOR 00 AND 90 ADAPTER ASSEMBLIES.

8. ALTERNATIVE FASTENING HARDWARE SUPPLIED FOR 45 ADAPTER ASSEMBLIES.

9. NON-STANDARD ENTRY SIZES ARE AVAILABLE ON REQUEST.

10. FOR ALTERNATIVE MATERIALS/FINISHES - CONTACT **TYCO ELECTRONICS.**

11. 45° AND 90° ADAPTER ASSEMBLIES HAVE UN-POLARIZED SHELLS. CABLE ENTRIES ARE REVERSIBLE.

CUSTOMER DRAWING

THIRD ANGLE PROJECTION	CAD NAME: TXS55	TYCO ELECTRONICS	Raychem Adapters 300 CONSTITUTION DRIVE MENLO PARK,CA 94025 U.S.A.
DO NOT SCALE THIS DRAWING	THIS DRAWING AND THE INFORMATION SET FORTH HEREON ARE THE PROPERTY OF TYCO ELECTRONICS AND ARE TO BE HELD IN TRUST AND CONFIDENCE. PUBLICATION, DUPLICATION, DISCLOSURE OR USE FOR ANY OTHER PURPOSE NOT EXPRESSLY AUTHORISED IN WRITING BY TYCO ELECTRONICS IS PROHIBITED.	TITLE TINEL-LOCK ADAPTERS FOR D-SUBMINIATURE CONNECTORS	

		DATE
DRAWN	IRT	JAN 98
CHECKED	KJW	JAN 98
APPROVED	KJW	JAN 98
PROJECT NO	85110	

SIZE	CAGE CODE:	DRAWING NUMBER	REV:
A	06090	TXS55 SHEET 1 OF 5	C

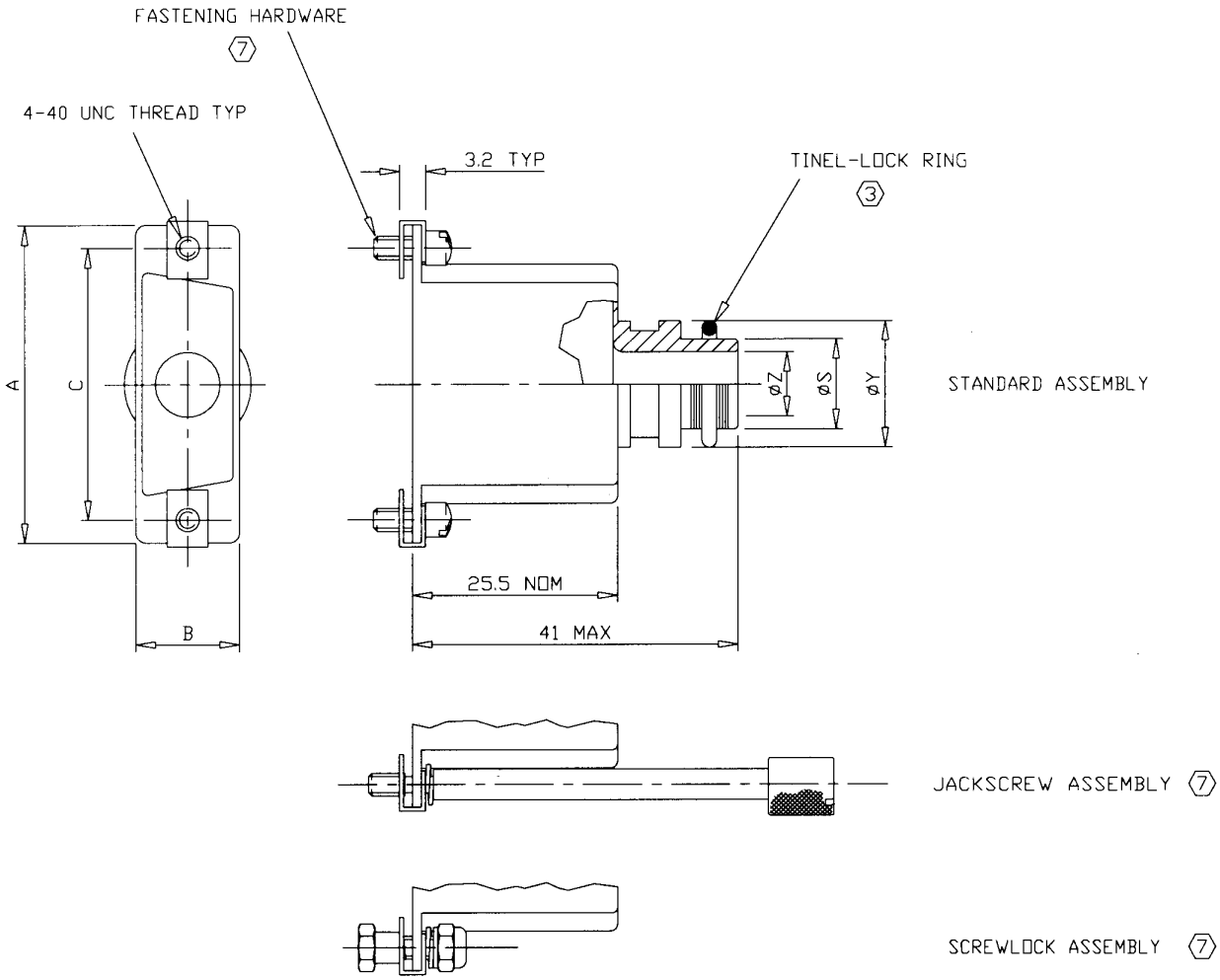

TABLE I				
ORDER NUMBER 6	STD ENTRY SIZE	A ±.03 [±0.75]	B ±.015 [±0.4]	C ±.004 [±0.1]
09	04	1.21 [30.75]	.49 [12.5]	.98 [25.0]
15	05	1.54 [39.00]	.49 [12.5]	1.31 [33.3]
25	05	2.09 [53.00]	.49 [12.5]	1.85 [47.0]
37	06	2.73 [69.25]	.49 [12.5]	2.5 [63.5]
50	07	2.64 [67.00]	.61 [15.5]	2.41 [61.1]

TABLE II			
ENTRY SIZE 2	ØZ +.010 -.020 [+0.25] [-0.50]	ØS	ØY ±.015 [±0.38]
04	.250 [6.35]	.370/.376 [9.39/9.56]	.550 [14.00]
05	.312 [7.92]	.432/.438 [10.97/11.13]	.612 [15.54]
06	.375 [9.52]	.495/.501 [12.57/12.73]	.675 [17.14]
07	.437 [11.09]	.556/.563 [14.12/14.31]	.737 [18.71]

TINEL-LOCK (00) STRAIGHT ADAPTER

CUSTOMER DRAWING

THIRD ANGLE PROJECTION	CAD NAME:	SIZE	CAGE CODE:	DRAWING NUMBER	REV:
	TXS55	A	06090	TXS55 SHEET 2 OF 5	C

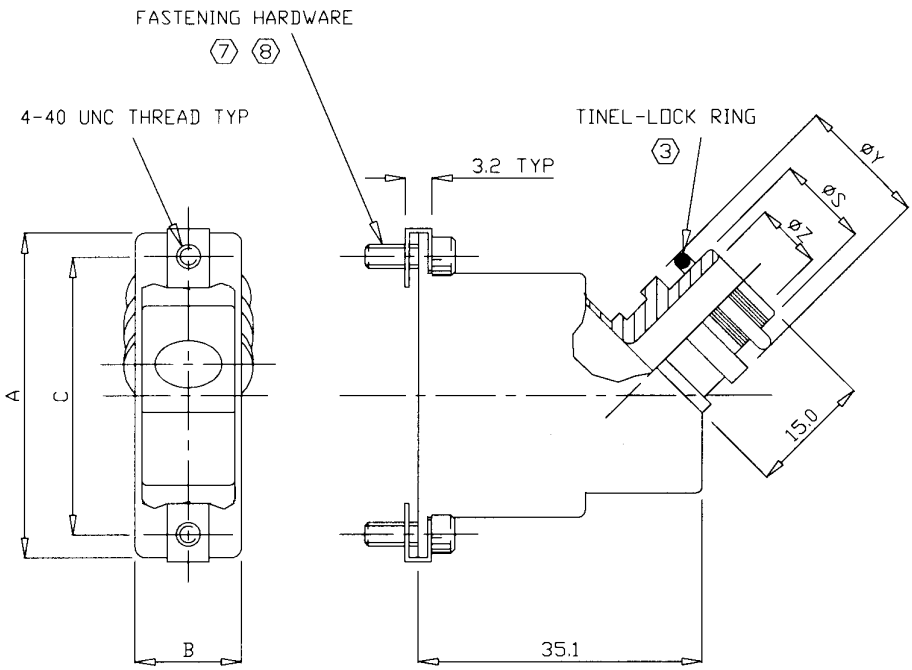

STANDARD ASSEMBLY

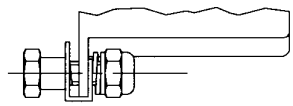

SCREWLOCK ASSEMBLY 8

TABLE I				
ORDER NUMBER 6	STD ENTRY SIZE	A ±.03 [±0.75]	B ±.015 [±0.4]	C ±.004 [±0.1]
09	04	1.21 [30.75]	.49 [12.5]	.98 [25.0]
15	05	1.54 [39.00]	.49 [12.5]	1.31 [33.3]
25	05	2.09 [53.00]	.49 [12.5]	1.85 [47.0]
37	06	2.73 [69.25]	.49 [12.5]	2.5 [63.5]
50	07	2.64 [67.00]	.61 [15.5]	2.41 [61.1]

TABLE II			
ENTRY SIZE 2	øZ +.010 -.020 [+0.25] [-0.50]	øS	øY ±.015 [±0.38]
04	.250 [6.35]	.370/.376 [9.39/9.56]	.550 [14.00]
05	.312 [7.92]	.432/.438 [10.97/11.13]	.612 [15.54]
06	.375 [9.52]	.495/.501 [12.57/12.73]	.675 [17.14]
07	.437 [11.09]	.556/.563 [14.12/14.31]	.737 [18.71]

TINEL-LOCK 45° ADAPTER

CUSTOMER DRAWING

THIRD ANGLE PROJECTION	CAD NAME:	SIZE	CAGE CODE:	DRAWING NUMBER	REV:
	TXS55	A	06090	TXS55 SHEET 3 OF 5	C

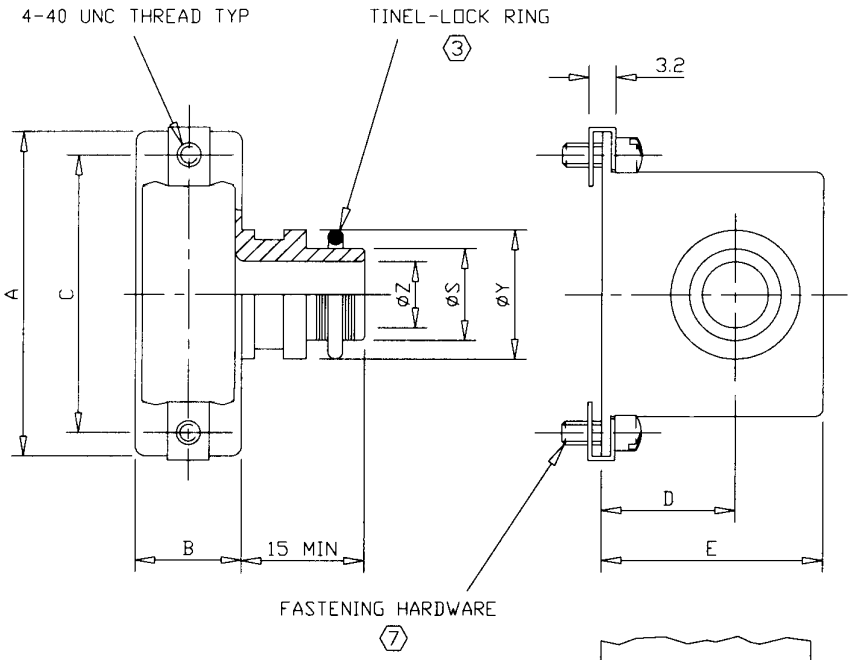

STANDARD ASSEMBLY

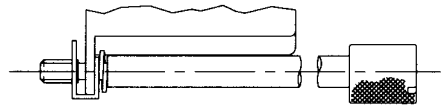

JACKSCREW ASSEMBLY
7

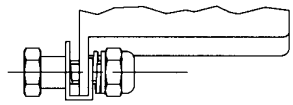

SCREWLOCK ASSEMBLY
7

TABLE I						
ORDER NUMBER 6	STD ENTRY SIZE	A ±.03 [±0.75]	B ±.015 [±0.4]	C ±.004 [±0.1]	D ± .010 [± 0.25]	E ± .010 [± 0.25]
09	04	1.21 [30.75]	.49 [12.5]	.98 [25.0]	.62 [15.7]	1.00 [25.4]
15	05	1.54 [39.00]	.49 [12.5]	1.31 [33.3]	.65 [16.5]	1.06 [26.9]
25	05	2.09 [53.00]	.49 [12.5]	1.85 [47.0]	.65 [16.5]	1.06 [26.9]
37	06	2.73 [69.25]	.49 [12.5]	2.5 [63.5]	.69 [17.5]	1.14 [28.9]
50	07	2.64 [67.00]	.61 [15.5]	2.41 [61.1]	.71 [18.0]	1.18 [30.0]

TABLE II			
ENTRY SIZE 2	ØZ +.010 -.020 [+0.25] [-0.50]	ØS	ØY ±.015 [±0.38]
04	.250 [6.35]	.370/.376 [9.39/9.56]	.550 [14.00]
05	.312 [7.92]	.432/.438 [10.97/11.13]	.612 [15.54]
06	.375 [9.52]	.495/.501 [12.57/12.73]	.675 [17.14]
07	.437 [11.09]	.556/.563 [14.12/14.31]	.737 [18.71]

TINEL-LOCK 90° ADAPTER

CUSTOMER DRAWING

THIRD ANGLE PROJECTION	CAD NAME:	SIZE	CAGE CODE:	DRAWING NUMBER	REV:
	TXS55	A	06090	TXS55 SHEET 4 OF 5	C

PART NUMBERING SYSTEM

TXS 55 A C 00-15 05 A I-J H

PRODUCT DESIGNATOR

SEQUENTIAL NUMBER

MATERIAL
A: ALUMINIUM ALLOY
(FASTENING HARDWARE: PASSIVATED STAINLESS STEEL OR NICKEL PLATED STEEL OR NICKEL PLATED BRASS)

FINISH
A: CADMIUM PLATE PER QQ-P-416, TYPE II, CLASS 3 - OLIVE DRAB
B: CADMIUM PLATE PER QQ-P-416, TYPE II, CLASS 3 - OLIVE DRAB OVER ELECTROLESS NICKEL (500HR SALT SPRAY RESISTANCE)
C: ELECTROLESS NICKEL PER MIL-C-26074, CLASS 3 OR 4, GRADE B

00: STRAIGHT ADAPTER
45: 45° ADAPTER (END ONLY)
90: 90° ADAPTER (SIDE ONLY)

(6) ORDER NUMBER

(2) ENTRY SIZE

BRAID DESIGNATOR
A: SINGLE LAYER 36 AWG
B: SINGLE LAYER 30 AWG
DOUBLE LAYER 36 AWG

RING WITH INSULATING LINING

(7) FASTENING HARDWARE - OMIT FOR STANDARD ASSEMBLIES
J: JACKSCREW ASSEMBLY
S: SCREWLOCK ASSEMBLY

MODIFICATION OPTION
H: HELICAL CONDUIT THREAD
(SEE CH00-0250-008 SHEET 5)

TINEL-LOCK ADAPTER

CUSTOMER DRAWING

THIRD ANGLE PROJECTION	CAD NAME:	SIZE	CAGE CODE:	DRAWING NUMBER	REV:
	TXS55	A	06090	TXS55 SHEET 5 OF 5	C