© 2022 TE Connectivity. All Rights Reserved.

REVISIONS					
P	LTR	DESCRIPTION	DATE	DWN	APVD
	A	INITIAL	25JUL2022	RW	CW
	B	ECR-23-194273	18DEC2023	BS	CW

NOTES:
1. TECHNICAL CHARACTERISTICS:
HOUSING MATERIAL: DIE CAST ALUMINIUM ALLOY
SURFACE: POWDER COATED, GREY
DEGREE OF PROTECTION: IP65 (MATED)

注释
1.技术参数
下壳材料：铝合金
表面处理：粉末涂层，灰色
防护等级IP65(配合)

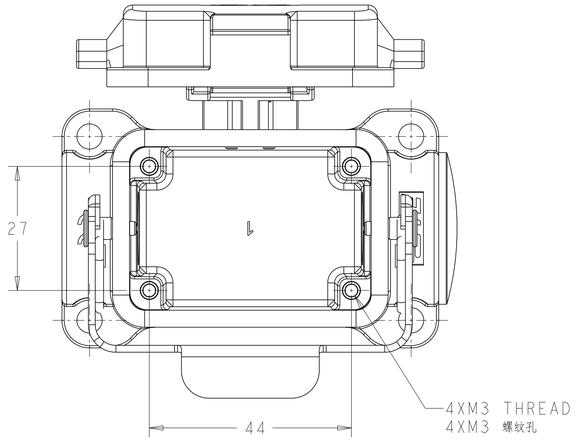

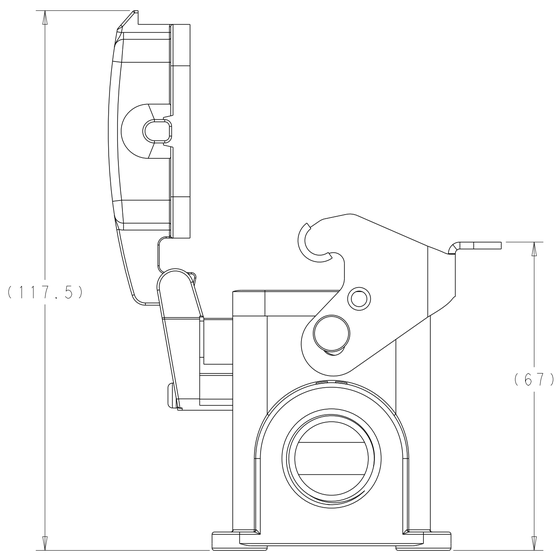

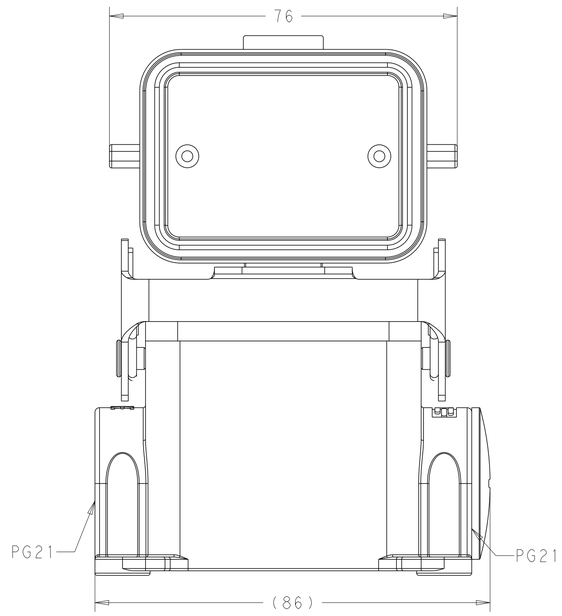

SCALE 3:2

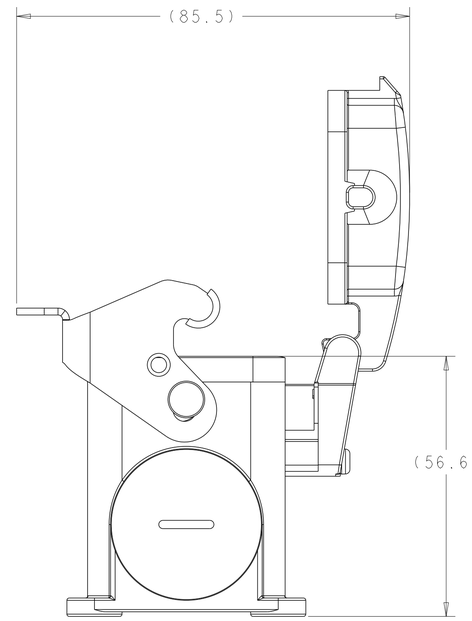

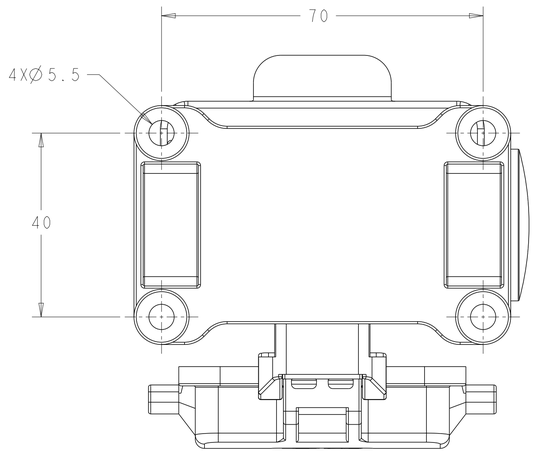

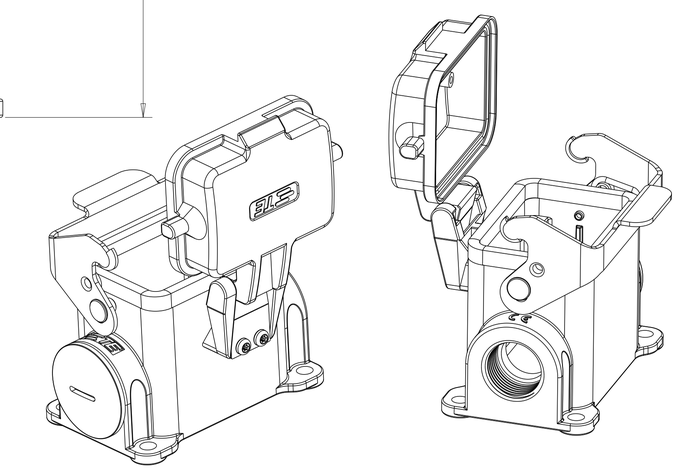

PART NUMBER 料号	PART DESCRIPTION 描述	
TI620063221-000	H6B-SDR-2PG21 WITH BLIND PLUG	H6B HOUSING,SURFACE MOUNTED,METAL SINGLE LOCKING,2PG21, PLASTIC PROTECTION COVER AND BLIND PLUG,POWDER COATED,GREY H6B下壳，表面安装，彩锌单扣，2PG21，带塑料保护盖和堵头，灰色粉末喷涂

THIS DRAWING IS A CONTROLLED DOCUMENT.

DIMENSIONS: mm

TOLERANCES UNLESS OTHERWISE SPECIFIED:
0 PLC ±
1 PLC ±
2 PLC ±
3 PLC ±
4 PLC ±
ANGLES ±

MATERIAL

FINISH

DWN RITA WANG 25JUL2022
CHK GINO YAO 25JUL2022
APVD CHRIS WANG 25JUL2022
PRODUCT SPEC 108-137013
APPLICATION SPEC 114-137013
WEIGHT

TE Connectivity

NAME H6B-SDR-2PG21 WITH BLIND PLUG

SIZE	CAGE CODE	DRAWING NO	RESTRICTED TO
A1	00779	C-TI620063221000	

CUSTOMER DRAWING; SCALE 1:1 SHEET 1 OF 1 REV B

4805 (3/13)