© 2020 TE Connectivity. All Rights Reserved.

REVISIONS					
P	LTR	DESCRIPTION	DATE	DWN	APVD
	A	NEW DRAWING	12MAR2020	GK	DB

LABEL AND LINER DESIGN

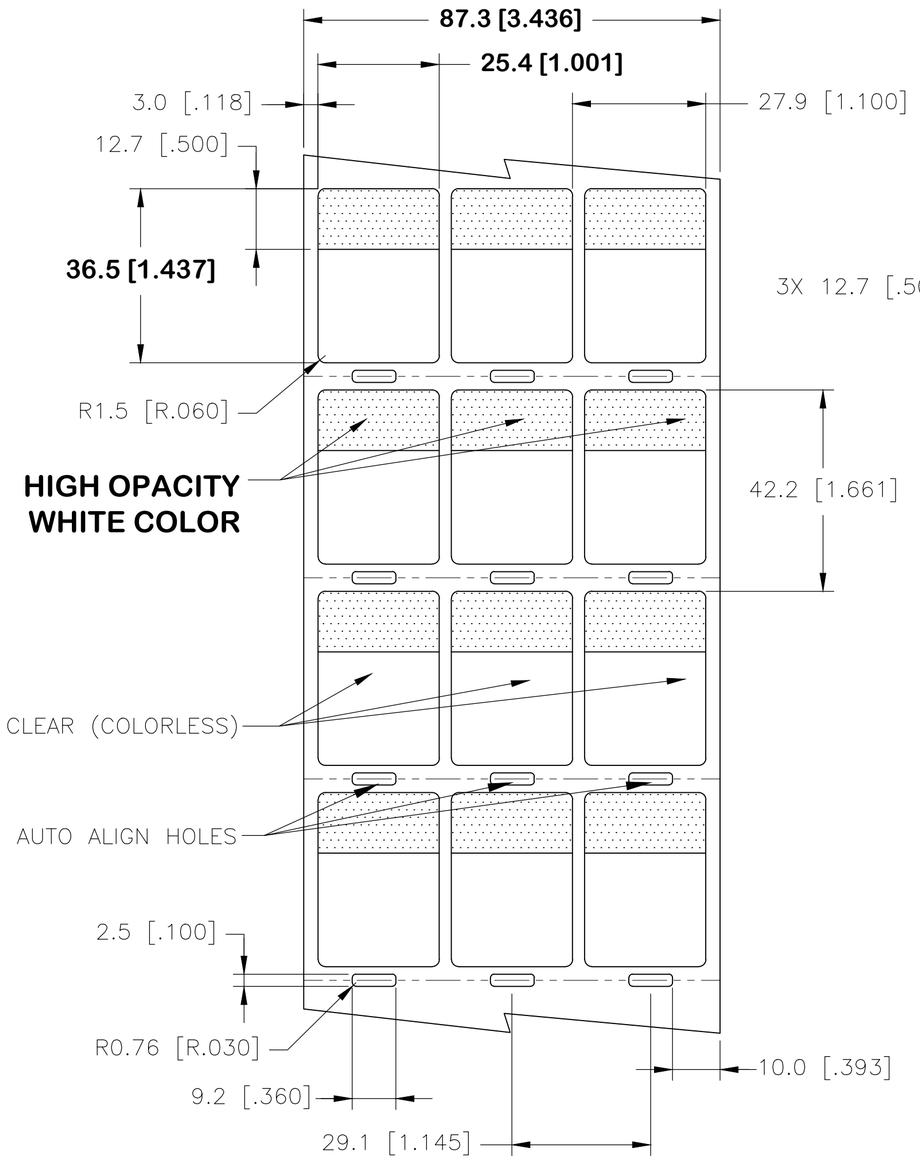

FRONT

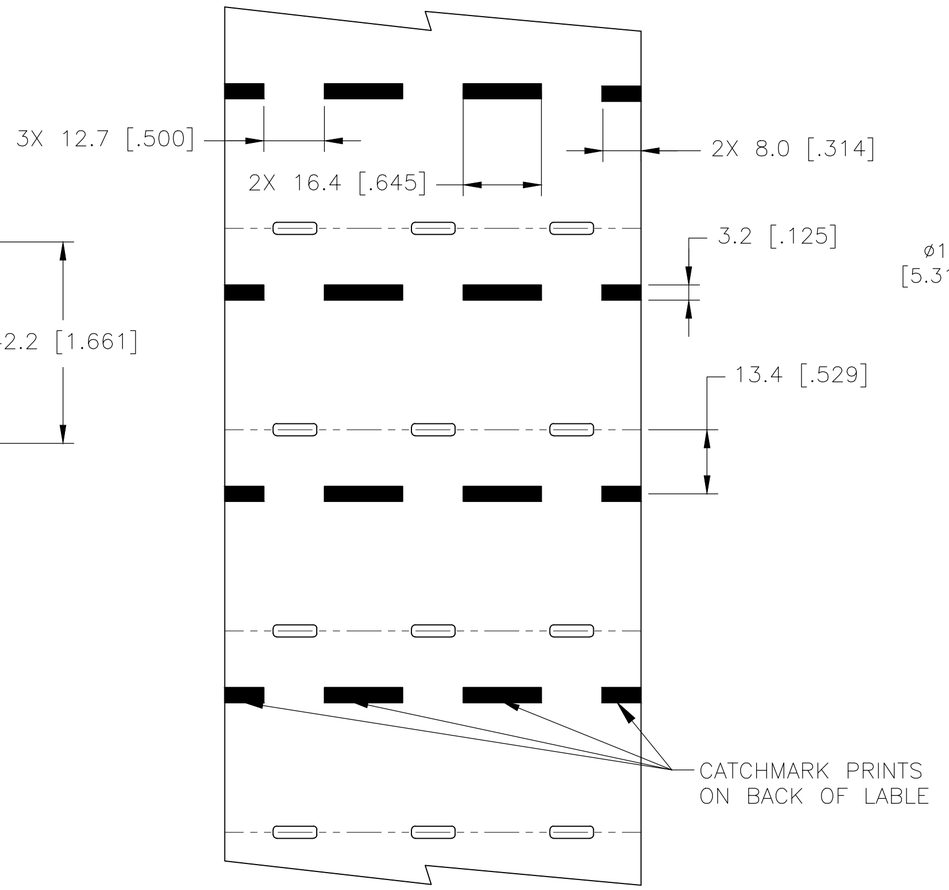

BACK

PRESENTATION

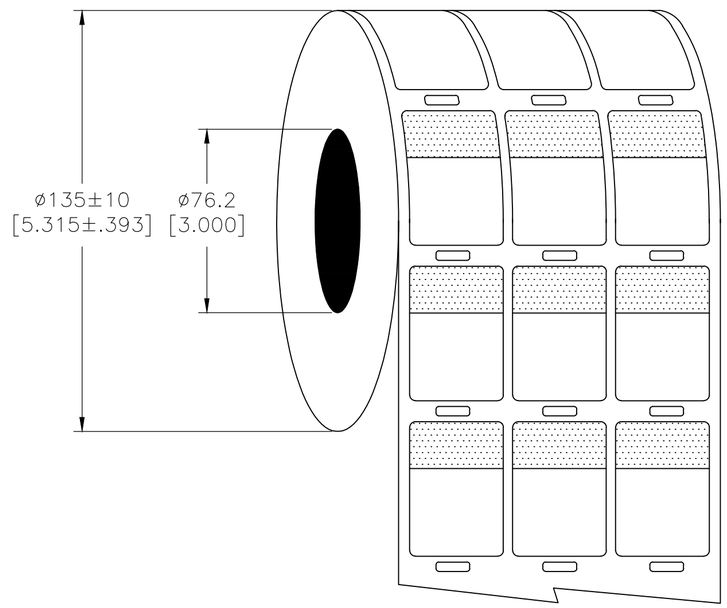

OUTSIDE WOUND
LABEL ACROSS: 3
PER ROLL QTY: 5,000

All dimensions in mm [Inch]

TE PN: E56137-000

MATERIAL	CLEAR POLYESTER
ADHESIVE TYPE	ACRYLIC PERMANENT
LINEAR	BLUE KRAFT

TOLERANCES mm [INCH]	
LABEL HEIGHT:	±0.3 [.012]
LABEL WIDTH:	±0.3 [.012]
WEB WIDTH:	±0.8 [.031]
VERTICAL REPEAT:	±0.8 [.031]*
HORIZONTAL REPEAT:	±0.8 [.031]*
PRINT POSITIONING:	±0.8 [.031]*
LEFT MARGIN:	±0.4 [.016]
QUANTITY:	−0 % +2 %
*NON ACCUMULATING	

THIS DRAWING IS A CONTROLLED DOCUMENT.

DIMENSIONS: mm [INCHES]

TOLERANCES UNLESS OTHERWISE SPECIFIED:
0 PLC ± –
1 PLC ± –
2 PLC ± –
3 PLC ± –
4 PLC ± –
ANGLES ± –

MATERIAL: SEE TABLE

FINISH: GLOSSY

DWN GOPALAKRISHNA HV 12MAR2020
CHK D.BURGAT 12MAR2020
APVD D.BURGAT 12MAR2020
PRODUCT SPEC TTDS–220
APPLICATION SPEC —
WEIGHT 0.054g
CUSTOMER DRAWING

TE Connectivity

NAME: SP LABEL – WHITE
25.4 x 36.5mm [1.00 x 1.43inch]
–

SIZE	CAGE CODE	DRAWING NO	RESTRICTED TO
A2	00779	C-SP100143WE5	—

SCALE NTS | SHEET 1 OF 1 | REV A

SP100143WE5

1471–9 (1/15)