EC No.
22779
22880

Emergency Switch

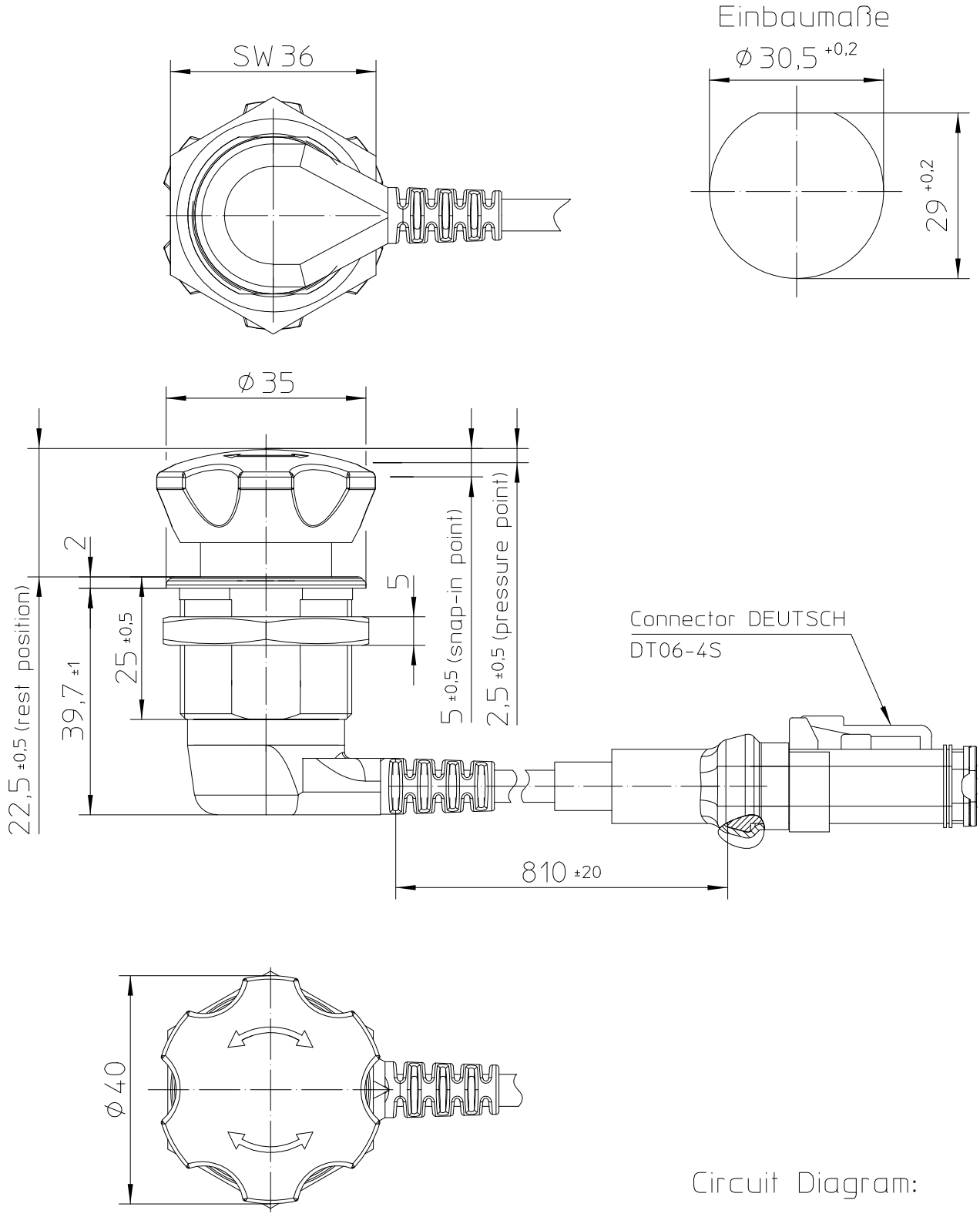

Circuit Diagram:

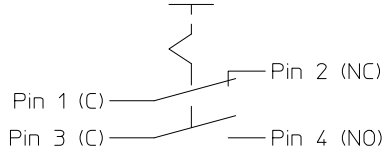

For this drawing we reserve the copyright in accordance with DIN ISO 16016

	Date	Name		Scale		Drawing No:
Create	24.04.2017	Drech	mm	1:1	KUSING	ES-2011-T412-081A
Edited	09.10.2019	Hamar	General Tolerances			
Check	09.10.2019	Baumg	DIN ISO 2768 cL			NSN.:

Technical Data

Construction

Material socket ..... PA GF RAL 1003; UL 94 V0
Material button ..... PA GK RAL 3000; UL 94 HB
Protection interior ..... IP67 IEC 60529
..... IP6K9K IEC 60529
connector (in mated condition) ..... IP67/ IP6K9K IEC 60529
Shock resistance ..... ISO 16750-3; 50g/ 6ms half sinus
Vibration resistance ..... ISO 16750-3; Test VII
Climatic resistance ..... IEC 60068-2-38
Chemical resistance ..... ISO 16750-5; Code Z
Temperature range ..... -40°C to +85°C
Torque M30x1,5 max. ..... 6 Nm
Weight ..... ca. 110g

Mechanical Data

Locking (turn to reset) ..... EN 60947-5-5
Positive opening operation (NC) ..... EN 60947-5-1
Switching sequence ..... BBM - Break before make
Operating force max. ..... 20-50 N
Torque knob max. ..... 3 Nm
Current carrying party ..... Cu-Alloy
Contact material ..... Ag-Alloy
Mechanical life ..... 40 000 cycles

Electrical Data

Voltage range ..... 9VDC to 32VDC
Nominal voltage ..... 12VDC / 24VDC
Dielectric withstanding voltage ..... 1050 VAC for 1 min.
contact resistance ..... max. 50 mOhm
Insulation resistance ..... > 100 MOhm at 500 VDC
Continuous current ..... 10mA to 8A
Current max. ..... 10,1 A
Switching capacity min. ..... 12 VDC, 10mA
Electrical life .....
at 8 A / 28 VDC ohmic load ..... 10 000 cycles
at 5 A / 28 VDC ohmic load ..... 40 000 cycles
at 2 A / 28 VDC ohmic load ..... 40 000 cycles
Short circuit protection ..... Automotive fast-acting fuse 10A

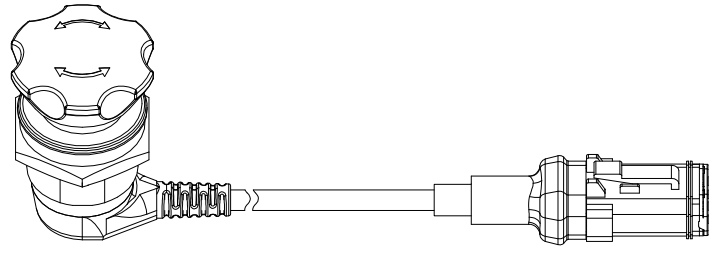

M 1:2

For this drawing we reserve the copyright in accordance with DIN ISO 16016