THIS DRAWING IS UNPUBLISHED. RELEASED FOR PUBLICATION 2008
© COPYRIGHT 2008 BY TYCO ELECTRONICS CORPORATION. ALL RIGHTS RESERVED.

LOC	DIST
A1	–

REVISIONS

P	LTR	DESCRIPTION	DATE	DWN	APVD
	2	VARIANTE 1-964108-1/-2 HINZU	22-04-92	Kürschner	
	A1	REDRAWN TO PRO/E	26.01.09	DZ	TK
	A2	REVISED PER ECO-09-026444	27NOV2009	KK	AEG
	A3	REVISED PER ECR-24-226209	06DEC2024	PS	TD

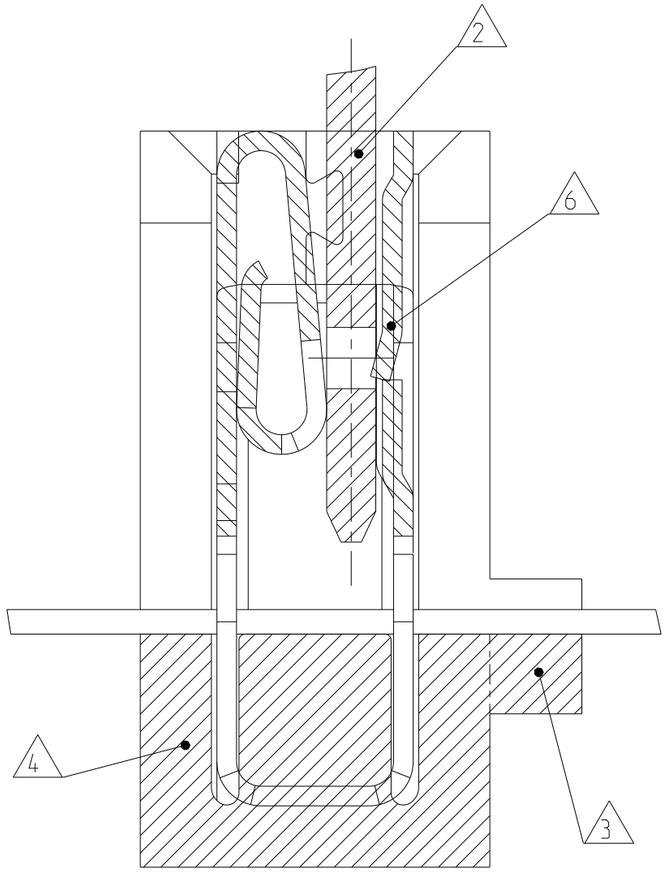

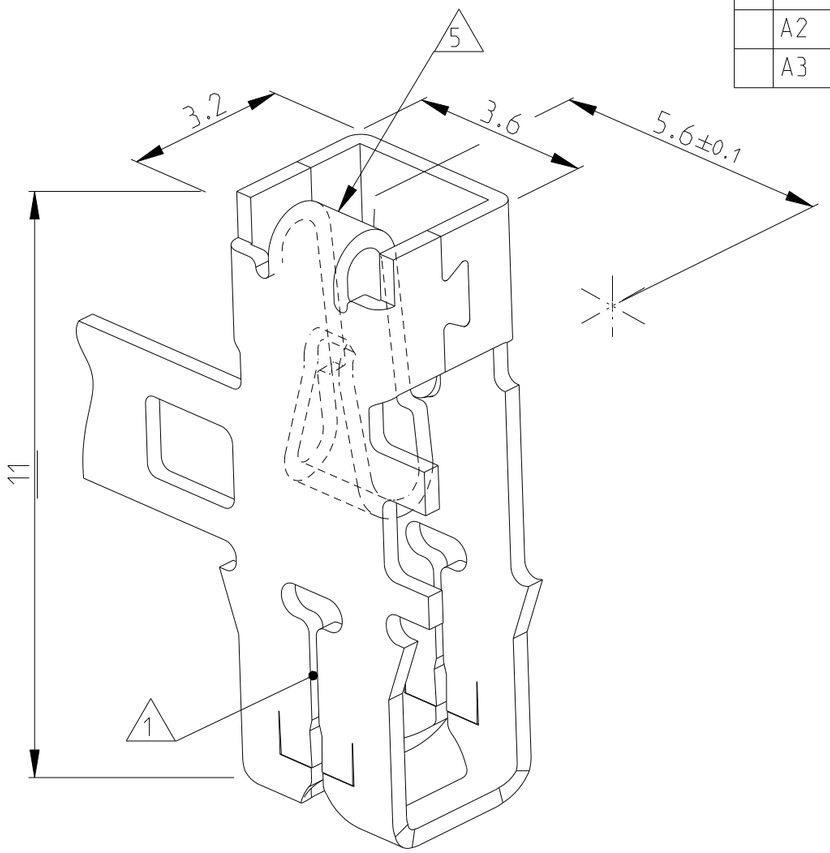

1. Kontakt geeignet fuer:
Lackdraht ∅0.265-0.40mm
(Einzeldraht oder zwei Draehte gleichen Durchmessers)
Slot accepts:
SINGLE MAGNET WIRE ∅0.265-0.40mm
DOUBLE MAGNET WIRE SAME DIAMETERS

2. Flachstecker A2.8-0.5mm oder A2.8-0.8mm nach DIN 46244
Flat pin A2.8-0.5mm or A2.8-0.8mm according to DIN 46244

3. Bereich wird beim Kontaktieren abgetrennt
AREA WILL BE CUTTED OF BY TERMINATION

4. Kontakt-Kammer nach Zeichnung 411-18514
CAVITY ACCORDING DWG 411-18514

5. Kennziffer fuer Lackdrahtbereich (6)
IDENTIFICATION NO. (6)

6. Unter Vorstrich-Zahl 1-...
auch "ohne" Rastnase lieferbar
UNDER PRAEFIX NO: 1- ....
also without locking nose available

ORDER-NR.	POS.	PIECE	Discription	MATERIAL	SURFACE COLOUR
–	–	–	–	–	–
1-964108-2 (6)	A	–	MAG-MATE Kontakt"without"	CuNiSi	posttinned
1-964108-1 (6)	A	–	MAG-MATE Kontakt"without"	CuNiSi	pretinned
964108-2	A	–	MAG-MATE Kontakt "with"	CuNiSi	posttinned
964108-1	A	–	MAG-MATE Kontakt "with"	CuNiSi	pretinned

THIS DRAWING IS A CONTROLLED DOCUMENT FOR TYCO ELECTRONICS CORPORATION IT IS SUBJECT TO CHANGE AND THE CONTROLLING ENGINEERING ORGANIZATION SHOULD BE CONTACTED FOR THE LATEST REVISION.

DIMENSIONS: mm

TOLERANCES UNLESS OTHERWISE SPECIFIED: ±0.2mm
0 PLC ±
1 PLC ±
2 PLC ±
3 PLC ±
4 PLC ±
ANGLES ±1°

MATERIAL: SEE TABLE
FINISH: SEE TABLE

DWN A.HOLCH 17-12-91
CHK H.PLÖßER 17-12-91
APVD –
PRODUCT SPEC 108-2012
APPLICATION SPEC 114-2046
WEIGHT –

Tyco Electronics
Tyco Electronics AMP GmbH
64625 Bensheim (Germany)

NAME: MAG-MATE TERMINAL WITH TAB-RECEPT. 2.8-0.5/0.8

SIZE A3 | CAGE CODE 00779 | DRAWING NO C-964108 | RESTRICTED TO

CUSTOMER DRAWING | SCALE 10:1 | SHEET 1 OF 1 | REV A3

AMP 1470-19 REV 31MAR2000