DWG NO 951-08_++

USED ON _

951 08 XX XX XX X X X 50 XXXX

BASIC IDENTIFIER
TYPE 5 - AS per UTE 93422 Specifications

SHELL TYPE
08 Plug for right angled backshell

TYPES OF ACCESSORIES
1

SHELL SIZE
08-10-12-14-16-18-20-22-24

ARRANGEMENTS

CONTACT TYPE
P Male Contact
S Female Contact

INSERT POSITIONING LETTER
Stanadard position : no letter
W-X-Y or Z

TYPE OF CONTACT
Size 20 Standard, none
Size 16 Standard, none
Size 08 Crimp type, consult us
Solder type standard : issue 8
Coax : Standard : none
issue 1 : 1
issue 3 : 3
issue F5 : F5

OBLIGATORY SUFFIX

SPECIAL MODIFICATIONS
311 Clear cadmium plating
031 Black Anodised plating
395 Kerosene resisting insert
A 315 Fitting for thermosink sleeve
A 231 Special olive drab cadmium 240 hrs salt spray resistance

1

ADAPTOR TYPE

Accessories	Crimping contacts Shell						Soldering contacts* Shell					
	00	01	02	06	07	08	00	01	02	06	07	08
Nut	R	R	-	R	R	-	E	E	-	E	E	-
Adaptor	RA	RA	-	RA	-	-	A	A	-	A	-	-
Straight cable clamp	RC	RC	-	RC	RC	-	EC	EC	-	EC	EC	-
Water-tight	RJ	RJ	-	RJ	RJ	-	J	J	-	J	J	-
Potting cup	RP	RP	-	RP	RP	-	P	P	-	P	P	-
Nut	-	SK	-	SK	-	-	-	EK	-	EK	-	-
Without nut	-	-	R	-	RA	-	-	-	E	-	A	-
Elbowed cable clamp	-	-	-	-	-	RC	-	-	-	-	-	EC
Closed elbowed cable clamp	-	-	-	-	-	SC	-	-	-	-	-	C
Closed water-tight end bell	-	-	-	-	-	SJ	-	-	-	-	-	EJ
Water-tight colletting end bell	-	-	-	-	-	SK	-	-	-	-	-	EK
Elbowed cable clamp and water-tight	-	-	-	-	-	SL	-	-	-	-	-	EL
Grounding adaptor	RT	RT	-	RT	RT	-	-	-	-	-	-	-

*Consult us for the soldering contact version.

PLUG WITH ELBOWED CABLE CLAMP

TYPE 08 RC 08 EC

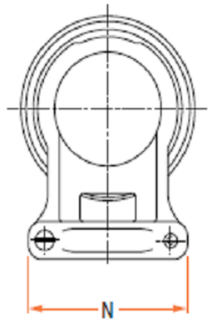

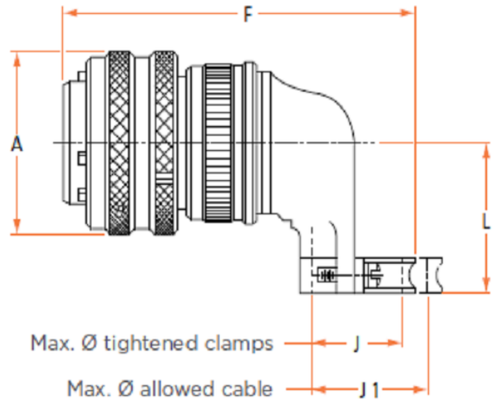

Crimp type Part-number	A max.	F max.	without sleeve J	without sleeve J1	with sleeve J	with sleeve J1	L max.	N max.	Solder type Part-number
951-08 RC 8-** P/S 50	17.75	43.85	5.15	5.80	2.40	3.00	20.70	17.40	951-08 EC 8-** P/S 50
951-08 RC 10-** P/S 50	21.05	46.20	7.25	7.80	3.00	4.00	22.00	20.20	951-08 EC 10-** P/S 50
951-08 RC 12-** P/S 50	24.60	49.65	10.55	11.20	5.60	7.90	23.80	23.60	951-08 EC 12-** P/S 50
951-08 RC 14-** P/S 50	28.05	51.90	12.05	13.20	7.90	11.10	25.30	25.50	951-08 EC 14-** P/S 50
951-08 RC 16-** P/S 50	31.10	55.30	15.85	17.00	7.90	11.10	26.80	29.70	951-08 EC 16-** P/S 50
951-08 RC 18-** P/S 50	34.40	57.85	17.95	19.00	11.10	14.30	28.30	32.60	951-08 EC 18-** P/S 50
951-08 RC 20-** P/S 50	37.65	62.75	21.05	22.70	14.30	15.90	29.90	36.00	951-08 EC 20-** P/S 50
951-08 RC 22-** P/S 50	40.90	65.85	24.25	25.90	15.90	19.00	31.60	39.20	951-08 EC 22-** P/S 50
951-08 RC 24-** P/S 50	44.10	68.95	27.45	29.00	19.00	23.80	33.20	42.80	951-08 EC 24-** P/S 50

CHARACTERISTIQUES

1. Shell material : Aluminium alloy
2. Plating : Standard plating - Olive Drab Cadmium passivated.
   Other platingoption - Clear Cadmium,
   Black Anodised for tropical environment
3. Type of contact : Crimp or solder type
4. Insert material for,
   Crimp type contacts : Fluoro silicone
   Solder type (Nonremovable) contacts : Neoprene
5. Temperature range:
   Crimp type -55°C to + 150°C
   Solder type -55°C to + 125°C
6. Service Voltage :
   Service rating 1 : 500 VRMS 50 Hz
   Service rating 2 : 750 VRMS 50 Hz

DIMENSIONS: MM

TOLERANCES UNLESS OTHERWISE SPECIFIED:
0 PLC ±–
1 PLC ±–0.05
2 PLC ±–0.05
3 PLC ±–0.02
4 PLC ±–

ANGLES ±– °
SURFACE TEXTURE

DWN LAKSHMI SUDHA R	MATERIAL – –	HEAT TREAT – –	
CHK RAKESH S	TE Connectivity		
APVD VINCENT P			
NAME 951 Series_Plug for right angled backshell			
SCALE 2:1	SIZE A3	DRAWING NO 951-08_++	SHEET 1 OF 1	REV A

THIS DRAWING IS A CONTROLLED DOCUMENT

THIS INFORMATION IS CONFIDENTIAL AND PROPRIETARY TO TYCO ELECTRONICS CORPORATION AND ITS WORLDWIDE SUBSIDIARIES AND AFFILIATES (TE). IT MAY NOT BE DISCLOSED TO ANYONE, OTHER THAN TE PERSONNEL, WITHOUT AUTHORIZATION FROM TE (www.TE.com).

3306-7 (3/13)