THIS DRAWING IS A CONTROLLED DOCUMENT.

LOC	DIST
GP	00

REVISIONS

P	LTR	DESCRIPTION	DATE	DWN	APVD
	D3	REVISED PER ECO-11-004835	11MAR11	RK	HMR

1 OBSOLETE PARTS: OBSOLETE CIS STREAMLINING PER D.RENAUD/D.SINISI

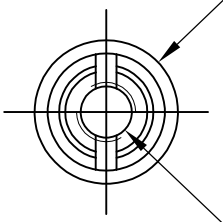

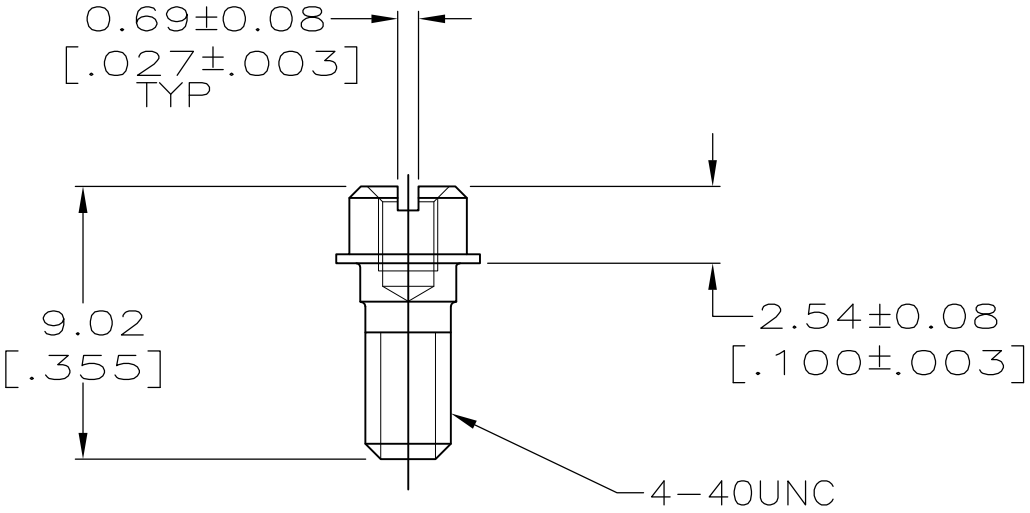

OBSOLETE	–	–	~~750644-3~~ 1
OBSOLETE	BULK	1000	750644-2
	INDIVIDUALLY	2	750644-1
	PACKAGING TYPE	QTY	PART NO

THIS DRAWING IS UNPUBLISHED. © COPYRIGHT – By – ALL RIGHTS RESERVED. RELEASED FOR PUBLICATION –,– .

DIMENSIONS: INCHES

TOLERANCES UNLESS OTHERWISE SPECIFIED:

0 PLC	± –
1 PLC	± –
2 PLC	± 0.13[.005]
3 PLC	± –
4 PLC	± –
ANGLES	± –

DWN J McCLINTON 12-13-90
CHK R.STONE 1-14-91
APVD –
PRODUCT SPEC –
APPLICATION SPEC –
WEIGHT –

MATERIAL STAINLESS STEEL
FINISH –

TE Connectivity

NAME SCREWLOCK KIT, FEMALE, UNASSEMBLED, AMPLIMITE™ .050 SERIES

SIZE	CAGE CODE	DRAWING NO	RESTRICTED TO
A4	00779	C-750644	–

CUSTOMER DRAWING

SCALE 4:1 SHEET 1 OF 1 REV D3

1469-35 (3/11)