THIS DRAWING IS UNPUBLISHED. RELEASED FOR PUBLICATION – ,– .
© COPYRIGHT – By – ALL RIGHTS RESERVED.

LOC	DIST
—	—

REVISIONS

P	LTR	DESCRIPTION	DATE	DWN	APVD
	E	REVISED PER ECR–13–001204	21JUN13	KH	PD

1 CONTINUOUS STRIP ON REELS.

2 0.00381 [.000150] MIN TIN OVER
0.00254 [.000100] MIN THK COPPER.

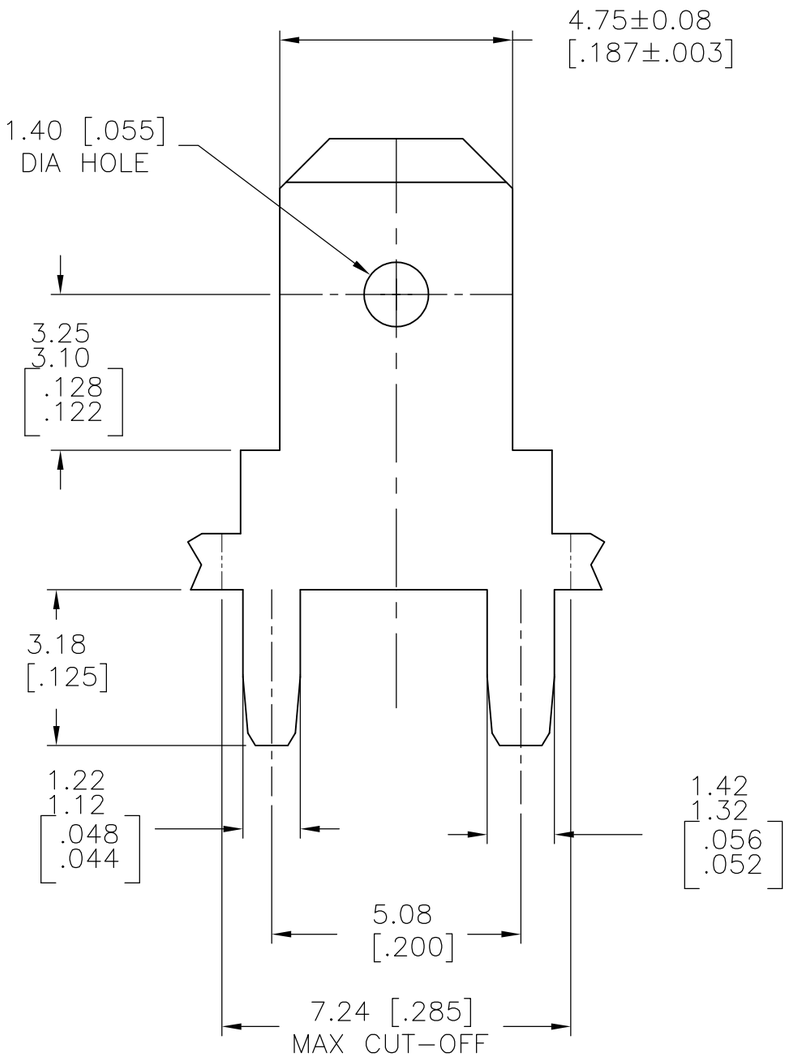

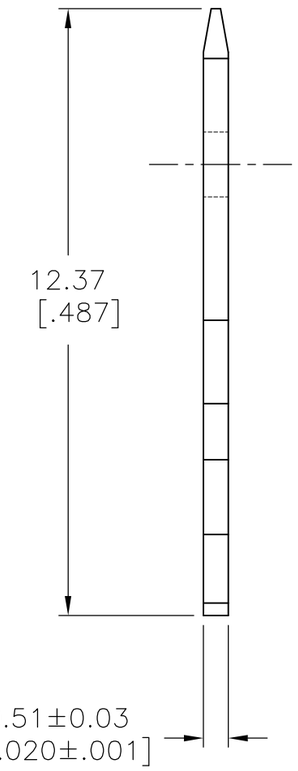

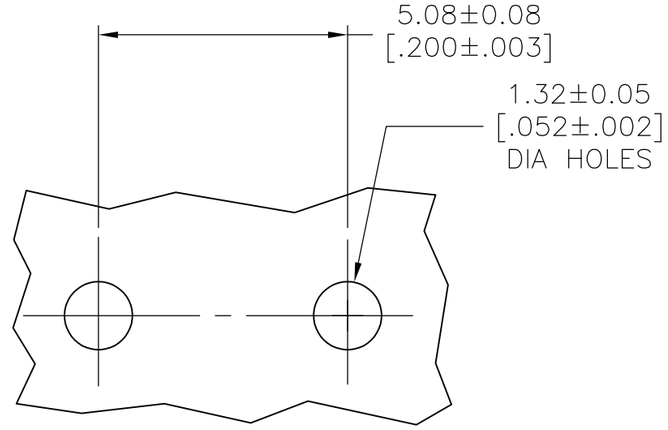

P.C.BOARD HOLES
SCALE 10:1

63603–1
PART NUMBER

THIS DRAWING IS A CONTROLLED DOCUMENT.

DIMENSIONS: mm [INCHES]

TOLERANCES UNLESS OTHERWISE SPECIFIED:
0 PLC ± –
1 PLC ± –
2 PLC ± 0.25 [.010]
3 PLC ± –
4 PLC ± –
ANGLES ± –

MATERIAL: BRASS

FINISH: 2 TIN OVER COPPER

DWN JR RUTH 30NOV00
CHK MS FEHER 30NOV00
APVD G PORTA 30NOV00
PRODUCT SPEC —
APPLICATION SPEC —
WEIGHT —

TE Connectivity

NAME: TAB, FASTON, PC BOARD, 4.75 [.187] SERIES

SIZE	CAGE CODE	DRAWING NO	RESTRICTED TO
A3	00779	C–63603	—

CUSTOMER DRAWING

SCALE	SHEET	REV
8:1	1 OF 1	E