D25BL

USED ON

DWG NO 6-1616989-4

THIS DRAWING IS A CONTROLLED DOCUMENT

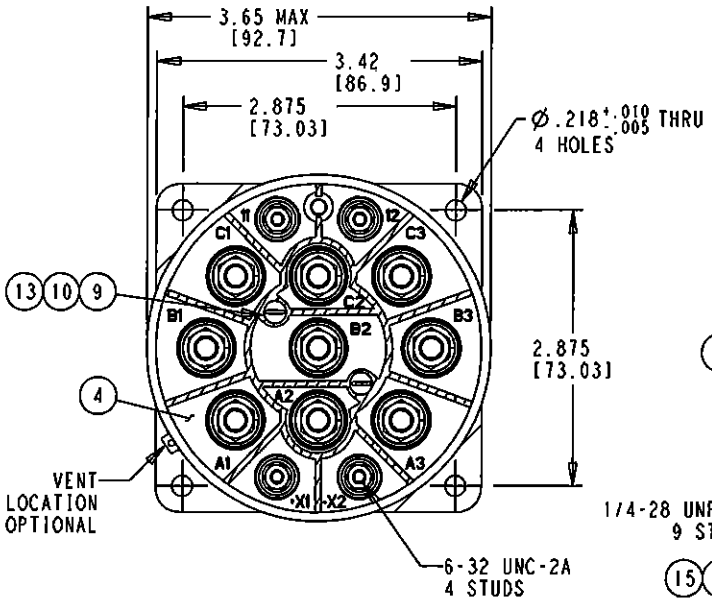

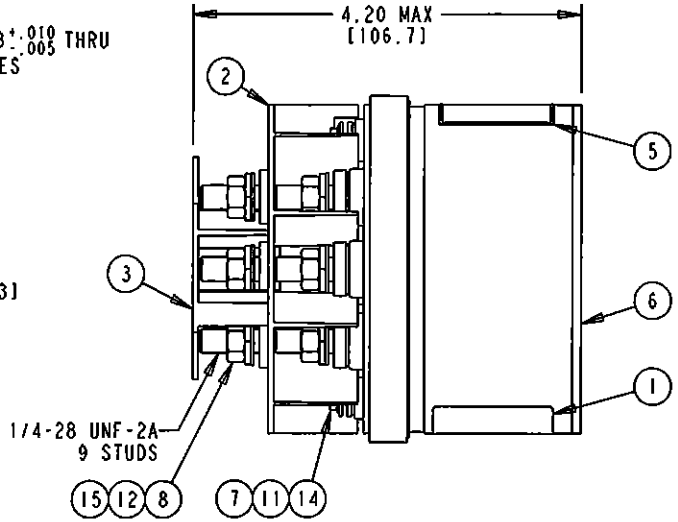

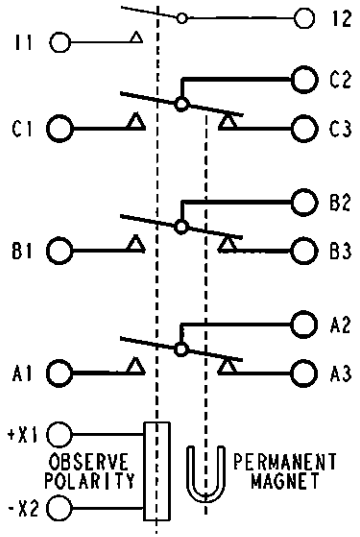

NOTES:
1. MOUNTING SURFACE SHALL PROVIDE ELECTRICAL GROUND

CONSTRUCTION	GASKET SEALED
MAIN CONTACTS	
CONFIGURATION	3PDT
VOLTAGE (NOMINAL)	115/200 VAC, 400 HZ
CURRENT (RESISTIVE)	100 AMP
AUXILIARY CONTACT	SPST NO, 5 AMP, 28 VDC
COIL DATA	
DUTY CYCLE	CONTINUOUS
OPERATING VOLTAGE	28 VDC
PICKUP	18 VDC MAX AT 71°C
DROPOUT	1.5 TO 7 VDC
RESISTANCE	80 OHMS ±20% AT 25°C
ENVIRONMENTAL DATA	
OPERATING TEMP	-55°C TO +71°C
ALTITUDE	50,000 FT MAX
LIFE ELECTRICAL	50,000 CYCLES MIN
WEIGHT (MAX)	2 LB 5 1/2 OZ
MAX INTERUPT CURRENT	600 AMPS

FIND NO	QTY REQD	PART OR IDENTIFYING NO	NOMENCLATURE OR DESCRIPTION	DRAWING OR SPECIFICATION	FSCM NO	TE PART NO	MATERIAL OR NOTE
15	9	51807-034	LOCKWASHER, 1/4 SPLIT			3-1616360-0	
14	4	51806-014	WASHER LOCK #6 SPLIT			1616360-7	BRONZE
13	2	51805-011	WASHER LOCK NO 5 SPLIT			9-1616359-7	BRONZE
12	9	51703-064	WASHER FLAT 1/2 X 17/64 X .032			6-1616358-7	
11	4	51702-204	WASHER 3/8 X 9/64 X .032			1-1616358-9	
10	2	51701-180	WASHER .015 X .103 X 3/16			7-1616357-7	MYLAR
9	2	51205-411	SCREW 5-40 1-3/8 RD HD			9-1616345-0	
8	9	50407-074	NUT 1/4-28 3/8 X 3/16 HEX			9-1616337-0	BRASS
7	4	50406-034	NUT 6-32 X 1/4 X 3/32 HEX			5-1616337-3	BRASS
6	1	20074-160	CONTACTOR ASSEMBLY - PRIMARY			7-1616991-0	
5	1	19203-001	PLATE - WIRING DIAGRAM			7-1616182-9	
4	1	17542-024	PLATE - BASE COVER			6-1616991-6	
3	1	17540-001	SHIELD TERMINAL TOP			7-1616176-3	
2	1	17539-001	SHIELD TERMINAL			6-1616176-8	
1	1	16043-001	NAME PLATE			3-1616169-5	

CAGE CODE: 74063
NO Horizon Division 175 D. DIAMOND STREET MANSFIELD, OHIO 44902

DIMENSIONS: INCHES[mm]

TOLERANCES UNLESS OTHERWISE SPECIFIED:
0 PLC ±
1 PLC ±
2 PLC ±.06
3 PLC ±.010
4 PLC ±

ANGLES± 1°
SURFACE TEXTURE √

DWN DLM 26JUN2012
CHK MDM 13/07/15
APVD 07/15/13

MATERIAL
HEAT TREAT

TE Connectivity

NAME CONTACTOR - 3PDT, 100 AMP
D25BL

SCALE	SIZE	DRAWING NO	SHEET	REV
NONE	A3	6-1616989-4	1 OF 1	A

P	LTR	REVISION RECORD	DATE	DWN	APVD
	A	RELEASE TO PRODUCTION	11JUL2013	-	MDM

LOC

DIST

THIS INFORMATION IS CONFIDENTIAL AND PROPRIETARY TO TYCO ELECTRONICS CORPORATION AND ITS WORLDWIDE SUBSIDIARIES AND AFFILIATES (TE). IT MAY NOT BE DISCLOSED TO ANYONE OTHER THAN TE PERSONNEL, WITHOUT AUTHORIZATION FROM TE (www.TE.com).

3306-7 13/113