THIS DRAWING IS UNPUBLISHED. RELEASED FOR PUBLICATION – ,– .
© COPYRIGHT – BY TYCO ELECTRONICS CORPORATION. ALL INTERNATIONAL RIGHTS RESERVED.

LOC	DIST
AD	00

REVISIONS

P	LTR	DESCRIPTION	DATE	DWN	APVD
	B	RELEASED PER ECO-09-017741	10AUG09	DH	DY

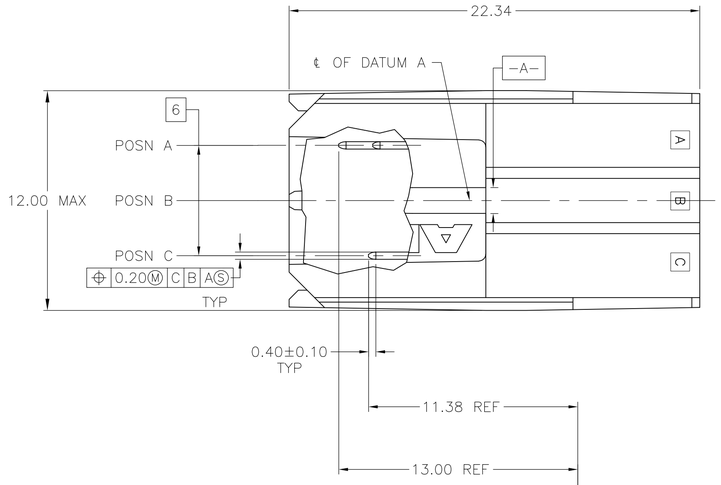

1. MATERIAL: HOUSING: POLYESTER. COLOR: GRAY.
   CONTACT: PHOSPHOR BRONZE.
2. FINISH: CONTACT MATING AREA: 1.27um MIN GOLD PLATE,
   ACTION PIN AREA: 0.5um MIN TIN PLATE,
   ALL OVER 1.27um MIN NICKEL UNDERPLATE.
3. FINISH: CONTACT LUBRICATION WITH BELLCORE APPROVED
   LUBRICANT. TECHNICAL REFERENCE: TR-NWT-001217, ISSUE 1,
   NOVEMBER 1992.
4. REFERENCE APPLICATION SPEC 114-1103 FOR
   RECOMMENDED PLATED THRU HOLE DIAMETER AND
   PLATING THICKNESS.

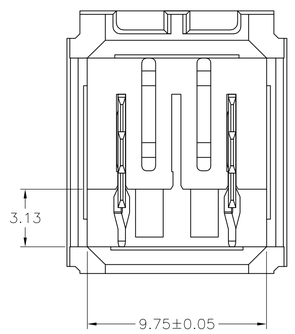

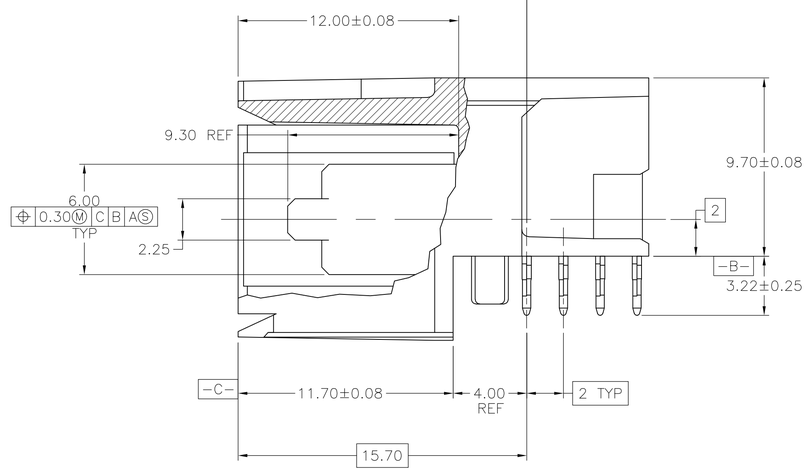

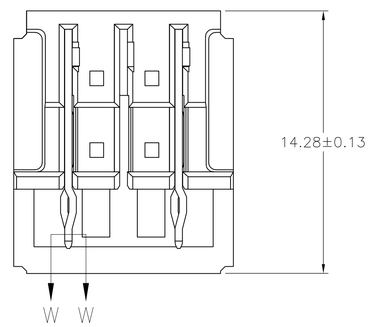

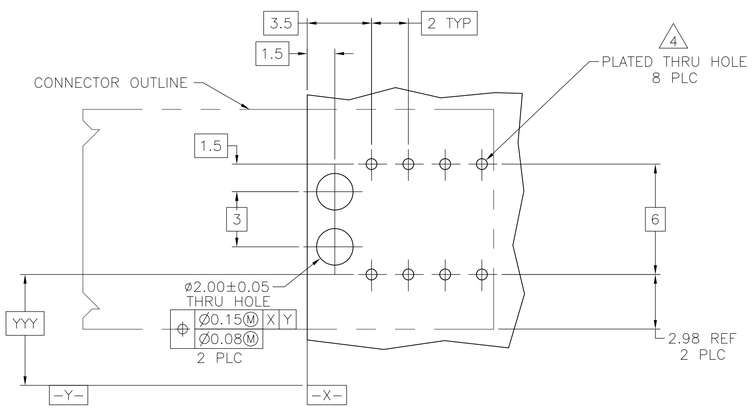

RECOMMENDED PCB HOLE LAYOUT

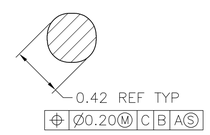

SECTION W–W
SCALE 40:1

A	C	2	5120914–1
POSITIONS LOADED WITH 9.30 REF CONTACTS	POSITIONS LOADED WITH 7.68 REF CONTACTS	NO OF LOADED POSITIONS	PART NUMBER

THIS DRAWING IS A CONTROLLED DOCUMENT.

DIMENSIONS: mm

TOLERANCES, UNLESS OTHERWISE SPECIFIED:
0 PLC ± –
1 PLC ± –
2 PLC ± 0.13
3 PLC ± –
4 PLC ± –
ANGLES ± –

MATERIAL 1
FINISH 2 3

DWN B.CARBO 10DEC04
CHK R.PATTERSON 10DEC04
APVD R.PATTERSON 10DEC04
PRODUCT SPEC –
APPLICATION SPEC –
WEIGHT –

Tyco Electronics
Tyco Electronics Corporation
Harrisburg, PA 17105-3608

NAME
ASSEMBLY, RIGHT ANGLE HEADER,
W/ RETENTION PEGS,
UNIVERSAL POWER MODULE

SIZE	CAGE CODE	DRAWING NO	RESTRICTED TO
A1	00779	C-5120914	–

CUSTOMER DRAWING
SCALE 8:1 SHEET 1 OF 1 REV B