© – TE Connectivity. All Rights Reserved.

REVISIONS

P	LTR	DESCRIPTION	DATE	DWN	APVD
	D	REVISED PER ECR-25-243621	08MAY2025	MS	JM

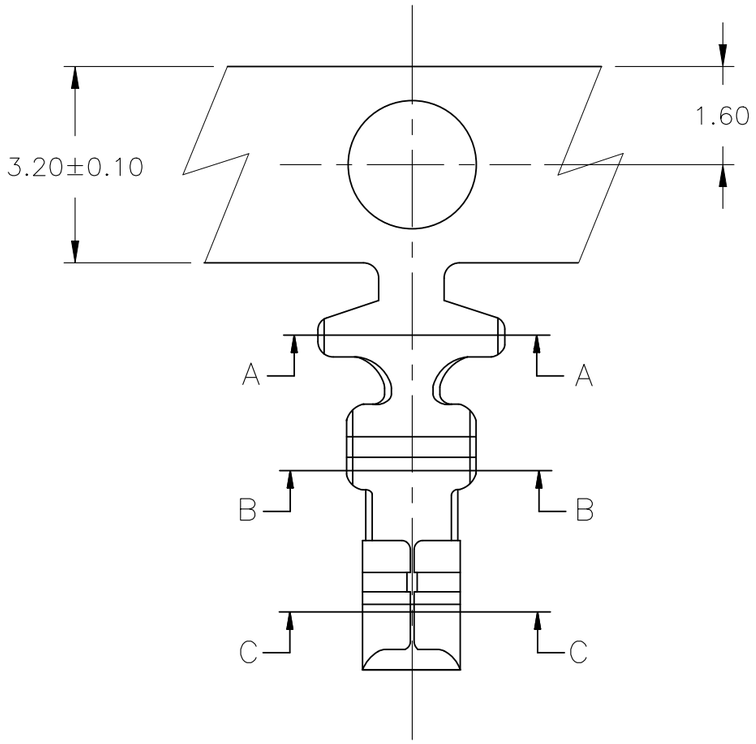

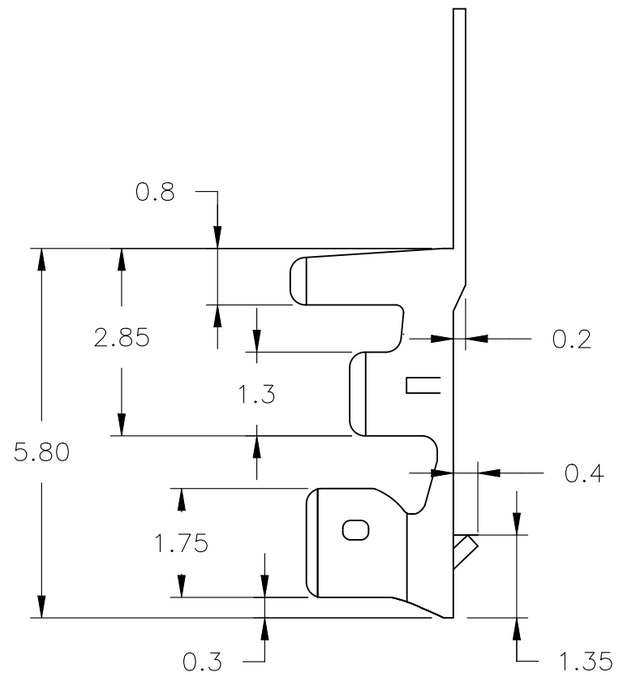

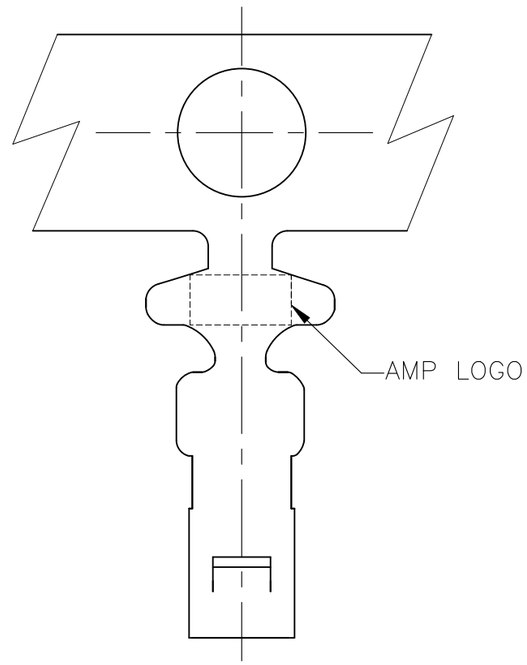

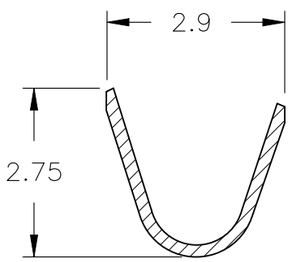

SEC A–A

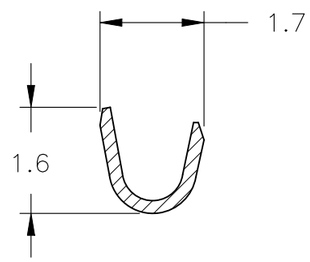

SEC B–B

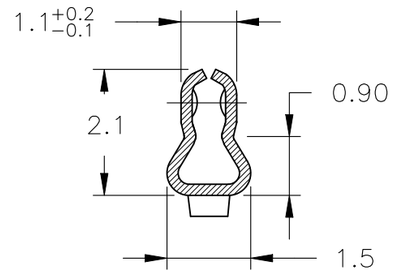

SEC C–C

NOTES:

1. MATERIAL : PHOSPHOR BRONZE, THICKNESS : 0.20mm.
2. FINISH :
   440134–1: PRE–TIN PLATED.
   440134–2: GOLD WITH NICKEL UNDER PLATING
3. ACCEPTS HOUSING : 440133
4. APPLICABLE WIRES : AWG #28~#22
5. INSULATION O.D. : 1.0 TO 1.9mm
6. QTY/REEL : 10.000 PCS
7. GENERAL TOLERANCE : ±0.3

PLATING	PART NO.
GOLD	440134–2
TIN	440134–1

THIS DRAWING IS A CONTROLLED DOCUMENT.

DIMENSIONS: mm

TOLERANCES UNLESS OTHERWISE SPECIFIED:

0 PLC	± 0.50
1 PLC	± 0.30
2 PLC	± 0.20
3 PLC	± 0.10
4 PLC	± –
ANGLES	± –

MATERIAL: SEE NOTE

FINISH: SEE NOTE

DWN MADHAN S 02MAY2025
CHK MADHAN S 02MAY2025
APVD MOHANTY, JAGRUTI 02MAY2025
PRODUCT SPEC 108–57099
APPLICATION SPEC 114–57004
WEIGHT –

CUSTOMER DRAWING

TE Connectivity

NAME: 2.5 MM PITCH HPI CRIMP CONTACT
–
–

SIZE	CAGE CODE	DRAWING NO	RESTRICTED TO
A3	00779	C–440134	–

SCALE NTS | SHEET 1 OF 1 | REV D

1470–19 (1/15)