A-770RSS REV. E

REVISIONS			RELEASED	
REV.		DESCRIPTION	DATE	APPROVED
C	32083	FIND NOS 11 & 12 ADDED	97/01/31	RS
D	32739	.266 HOLE WAS .358/.360, BALLOONS 2 & 3 REVERSED	97/04/25	RS
E	37088	FIND NO 9 WAS 50808-064	98/09/14	RS

FAA/PMA

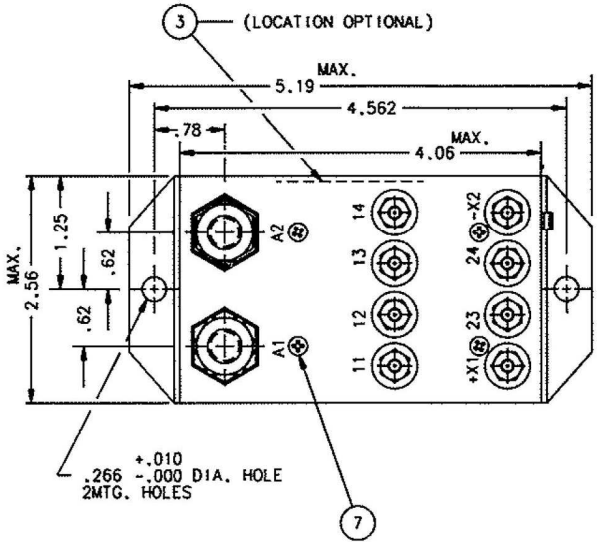

CONSTRUCTION	GASKET SEALED (VENTED)
MAIN CONTACTS	
CONFIGURATION	SPST N.O.
VOLTAGE (NOMINAL)	28 VDC
CURRENT	300 AMP.
AUXILIARY CONTACTS	
11-12-13-14	FORM Z OPERATE BEFORE MAINS CLOSE
23-24	SPST-N.C.
VOLTAGE	28 VDC
CURRENT RES.	5 AMP. 10 AMP CARRY ONLY
SURGE	30 AMP CARRY ONLY FOR 0.1 SEC.
COIL DATA	
DUTY CYCLE	CONTINUOUS
NOMINAL VOLTAGE	24-30 VDC
PICKUP MAX.	18 VDC
DROPOUT VOLTAGE	.5 - 7 V
RESISTANCE	90 OHM ± 20% AT 25L_J
SUPPRESSION	45 V PEAK
ENVIRORMENTAL DATA	
AMBIENT TEMP.	-55L_J TO +71L_J
LIFE ELECTRICAL	50,000 CYCLES MIN.
LIFE MECHANICAL	100,000 CYCLES
WEIGHT MAX. (EST.)	2 LBS.

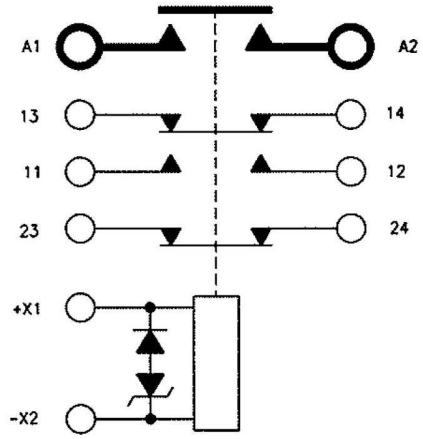

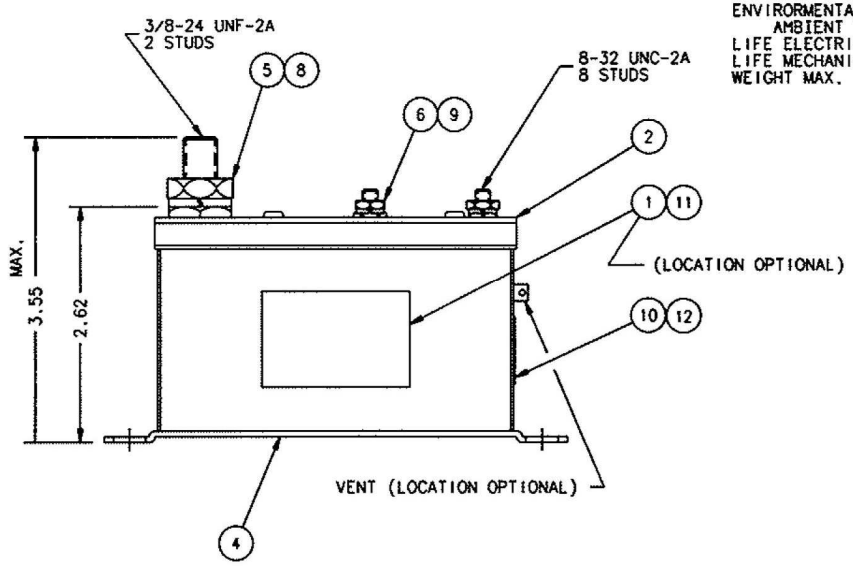

NOTES:
1. THIS UNIT DESIGNED TO THE BASIC REQUIREMENTS OF MIL-R-6106 EXCEPT AS NOTED.
2. QUALIFICATION TESTING NOT COMPLETED.
3. MOUNTING SURFACE SHALL PROVIDE ELECTRICAL GROUND.

FIND NO	QTY REQD	PART OR IDENTIFYING NO	NOMENCLATURE OR DESCRIPTION	FSCM NO	DRAWING OR SPECIFICATION	MATERIAL OR NOTE
12	1	39529-024	OVERLAY			
11	1	39529-001	OVERLAY			
10	1	58400-014	PLATE - FAA/PMA			
9	8	51808-064	WASHER-LOCK-No.8 X .307 x .047			BRONZE
8	2	51807-084	WASHER-LOCK-3/8 X .688 X .094			BRONZE
7	4	51200-020	SCREW-No. 4 X 1/4 SHEETMETAL			STAINLESS STEEL
6	8	50408-034	NUT-8-32 X 5/16 X 3/32 HEX			BRASS
5	2	50407-164	NUT-3/8-24 X 5/8 X 7/32 HEX			BRASS
4	1	37221-010	CONTACTOR ASSEMBLY-PRIMARY			
3	1	17959-001	PLATE-WARNING			
2	1	33266-005	PLATE-BASE COVER			
1	1	16043-001	NAME PLATE			

UNLESS OTHERWISE SPECIFIED DIMENSIONS ARE IN INCHES TOLERANCES ON

2 PL DEC.	3 PL DEC.	ANGLES
± .06	± .010	± 1°

DR BY	RLS	98/11/04
CHK BY	RS	98/11/04
ENGR	JZ	98/11/11
MFG	CC	98/11/12
RELEASE		
CONTR NO.		
GOVT APPVL		

HARTMAN ELECTRICAL MANUFACTURING
MANSFIELD, OHIO

KLC
300 AMP, 28 VOLTS

093

SIZE	CODE IDENT	DWG NO.
C	74063	A-770RSS

SCALE NONE SHEET