THIS DRAWING IS UNPUBLISHED. RELEASED FOR PUBLICATION 20
© COPYRIGHT 20 BY - ALL RIGHTS RESERVED.

REVISIONS					
P	LTR	DESCRIPTION	DATE	DWN	APVD
	1	INITIAL RELEASE	01SEP2017	VU	ZL
	A	ECO-18-007483	15MAY2018	ZL	ZL
	A1	ECO-19-014367	01OCT2019	VU	ZL
	A2	ECN-22-136883	28JAN2022	DL	DL

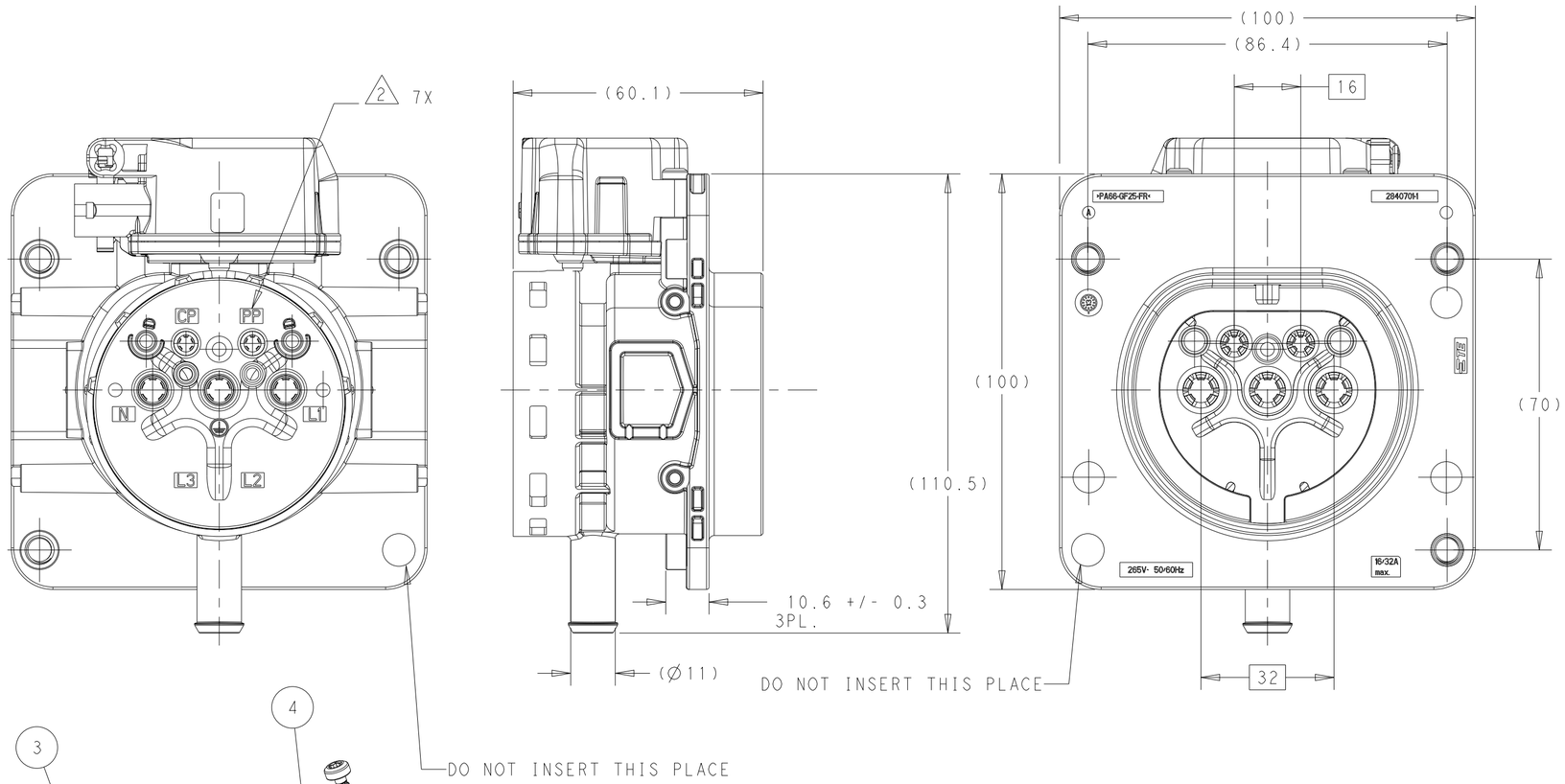

1. ASSEMBLY PART NUMBER 2840704-1 AND 1-2840704-1 SHOWN ON THE DRAWING

2. IDENTIFICATION FOR CONTACTS AS SHOWN

A2 3. THE ACTUATOR USED IN 1-2840704-1 HAVE ACTUATOR LOCKING PIN REDESIGNED TO WITHSTAND 500N IN AXIAL DIRECTION AND THE GASKET DUROMETER CHANGED FROM 60 SHORE A TO 30 SHORE A.

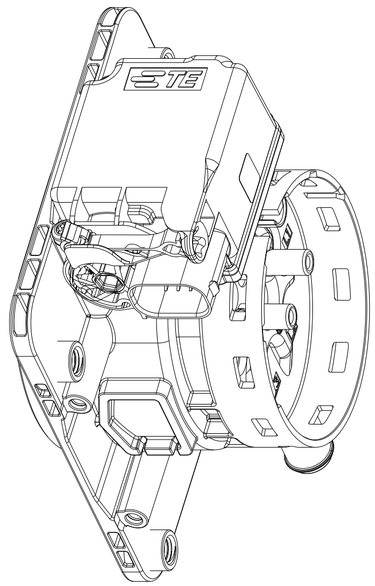

SCALE 1:1

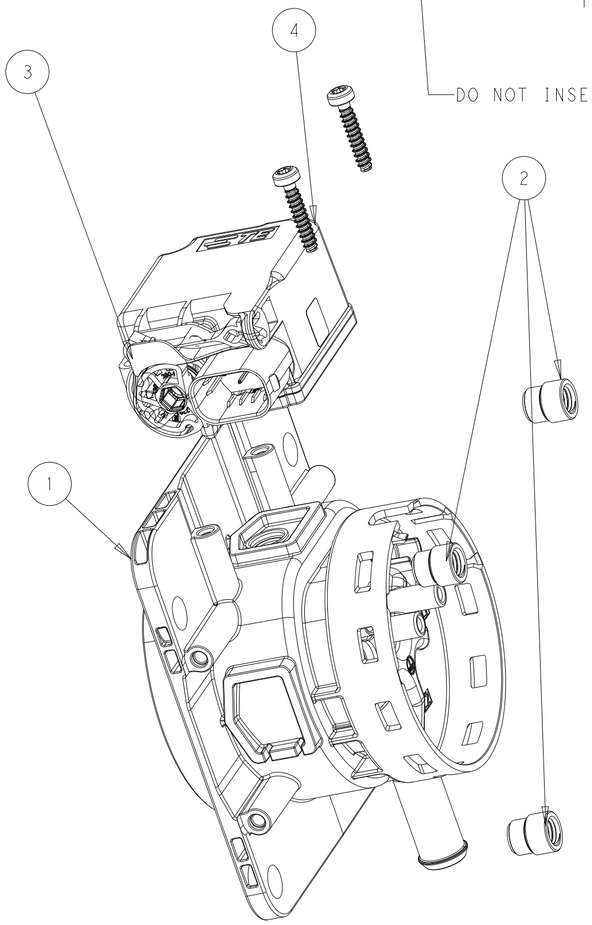

1-2840704-1	2840704-1	MATERIAL	COLOR	DESCRIPTION	PART NUMBER	ITEM NO
1	1	VARIES	-	LOCK ACTUATOR	-	4
2	2	STEEL	-	EJOT SCREW	-	3
3	3	BRASS	-	THREADED INSERT	-	2
1	1	PA66-GF25-FR ULTRAMID A3X2G5 BK_00100 1-703817-3	BLACK RAL 9011	5POS, MIXED, HSG, SAE J1772/IEC62196-2, TYPE 2, TOP ACTUATOR PORT	-	1

A2

THIS DRAWING IS A CONTROLLED DOCUMENT.

DIMENSIONS: mm

TOLERANCES UNLESS OTHERWISE SPECIFIED:
0 PLC ±-
1 PLC ±-
2 PLC ±-
3 PLC ±-
4 PLC ±-
ANGLES ±-

MATERIAL: VARIES
FINISH: -

DWN V. UMARJI 31AUG2017
CHK G. BHAT 01SEP2017
APVD Z. LYON 01SEP2017
PRODUCT SPEC -
APPLICATION SPEC -
WEIGHT -

TE Connectivity

NAME: 5 POS, MIXED, HSG ASM, SAE J1771/IEC62196-2, TYPE-2

SIZE A2 | CAGE CODE 00779 | DRAWING NO C-2840704-1 | RESTRICTED TO -

CUSTOMER DRAWING | SCALE 1:1 | SHEET 1 OF 1 | REV A2

1471-9 (3/13)