CONNETTORE TIPO A (CON MOLLA DI RITEGNO ESTERNA)
CONNECTOR TYPE B (WITH INTERNAL SPRING)

SCALA NON IMPEGNATIVA (DO NOT SCALE)
DIMENSIONI IN (DIMENSIONS IN) mm
METRIC
PROIEZIONE EUROPEA (EUROPEAN PROJECTION)

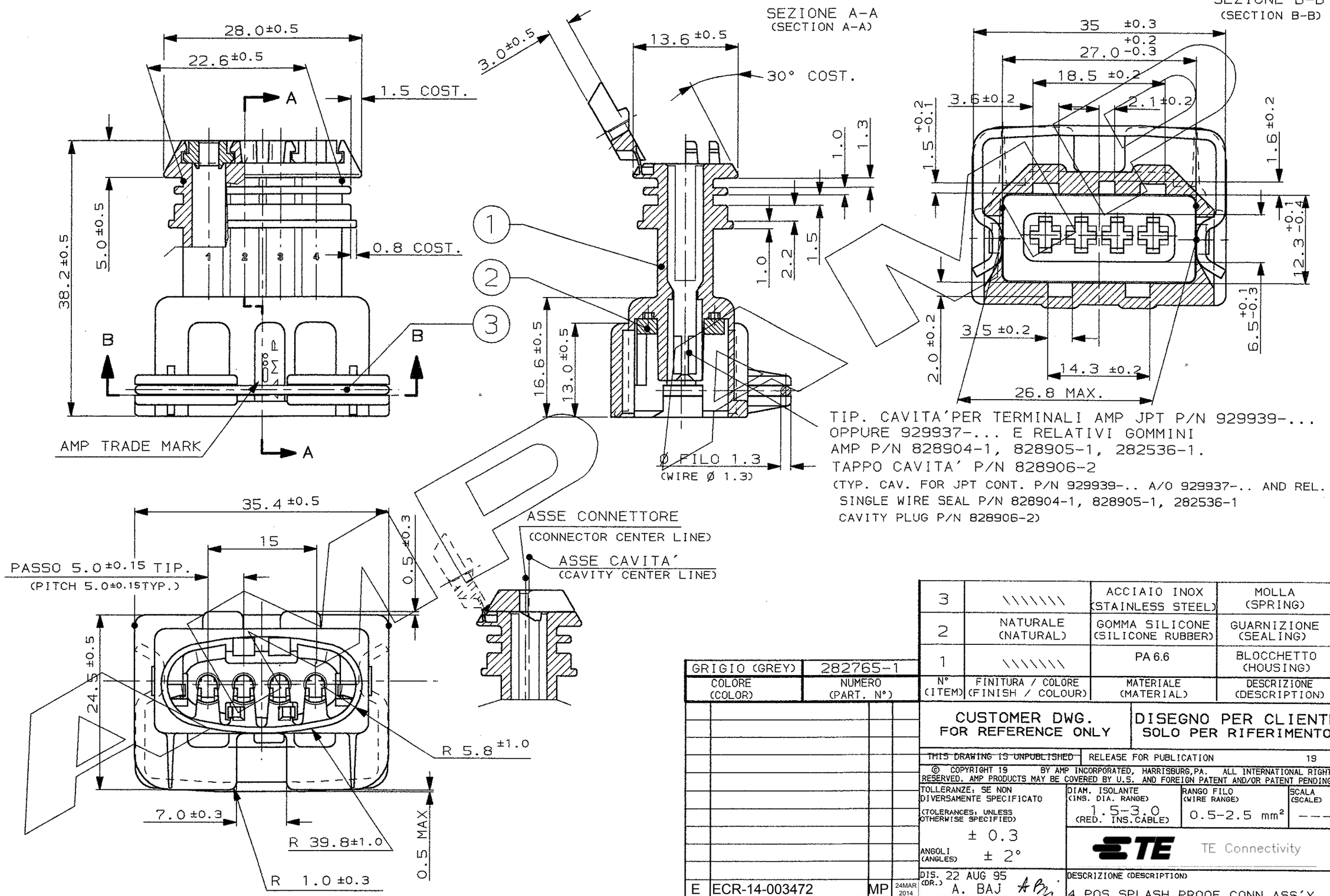


| N° (ITEM) | FINITURA / COLORE (FINISH / COLOUR) | MATERIALE (MATERIAL) | DESCRIZIONE (DESCRIPTION) |
|---|---|---|---|
| 3 | \\\\\\\ | ACCIAIO INOX (STAINLESS STEEL) | MOLLA (SPRING) |
| 2 | NATURALE (NATURAL) | GOMMA SILICONE (SILICONE RUBBER) | GUARNIZIONE (SEALING) |
| 1 | \\\\\\\ | PA 6.6 | BLOCCHETTO (HOUSING) |

| COLORE (COLOR) | NUMERO (PART. N°) |
|---|---|
| GRIGIO (GREY) | 282765-1 |

| REV. (REV.LTR.) | REVISIONI (REVISION RECORD) | DIS. (DR) | DATA (DATE) |
|---|---|---|---|
| E | ECR-14-003472 | MP | 24MAR 2014 |
| B | AGGIORNATO E IN PRODUZIONE EC ET00-0075-96 | A.B. | 12-2 1996 |
| A | PRIMA EMISSIONE CON ECN ET00-0217-95 | A.B. | 15-9 1995 |

CUSTOMER DWG.
FOR REFERENCE ONLY

DISEGNO PER CLIENTE
SOLO PER RIFERIMENTO

~~THIS DRAWING IS UNPUBLISHED~~ RELEASE FOR PUBLICATION 19

© COPYRIGHT 19 BY AMP INCORPORATED, HARRISBURG,PA. ALL INTERNATIONAL RIGHT RESERVED. AMP PRODUCTS MAY BE COVERED BY U.S. AND FOREIGN PATENT AND/OR PATENT PENDING

TOLLERANZE, SE NON DIVERSAMENTE SPECIFICATO (TOLERANCES, UNLESS OTHERWISE SPECIFIED) ± 0.3
ANGOLI (ANGLES) ± 2°

| DIAM. ISOLANTE (INS. DIA. RANGE) | RANGO FILO (WIRE RANGE) | SCALA (SCALE) |
|---|---|---|
| 1.5-3.0 (RED. INS.CABLE) | 0.5-2.5 mm² | --- |

TE Connectivity

DIS. (DR.) 22 AUG 95 A. BAJ
CONT. (CHK) 22 AUG 95 C. TARTARI
APP. (APP.)

DESCRIZIONE (DESCRIPTION)
4 POS.SPLASH PROOF CONN.ASS'Y with SPEC.POLARIZ. AND SEC. LOCK

| LOC. | SIZE | NUMERO (DWG NO) | REV. | FOGLIO (SHEET) |
|---|---|---|---|---|
| I | A3 | C-282765 | E | 1 DI (OF) 2 |

DISTRIBUZIONE (PRINT DIST.)

AMP-ITA 7523 - 5/82

SCALA NON IMPEGNATIVA (DO NOT SCALE)
DIMENSIONI IN (DIMENSIONS IN) mm

METRIC

PROIEZIONE EUROPEA (EUROPEAN PROJECTION)

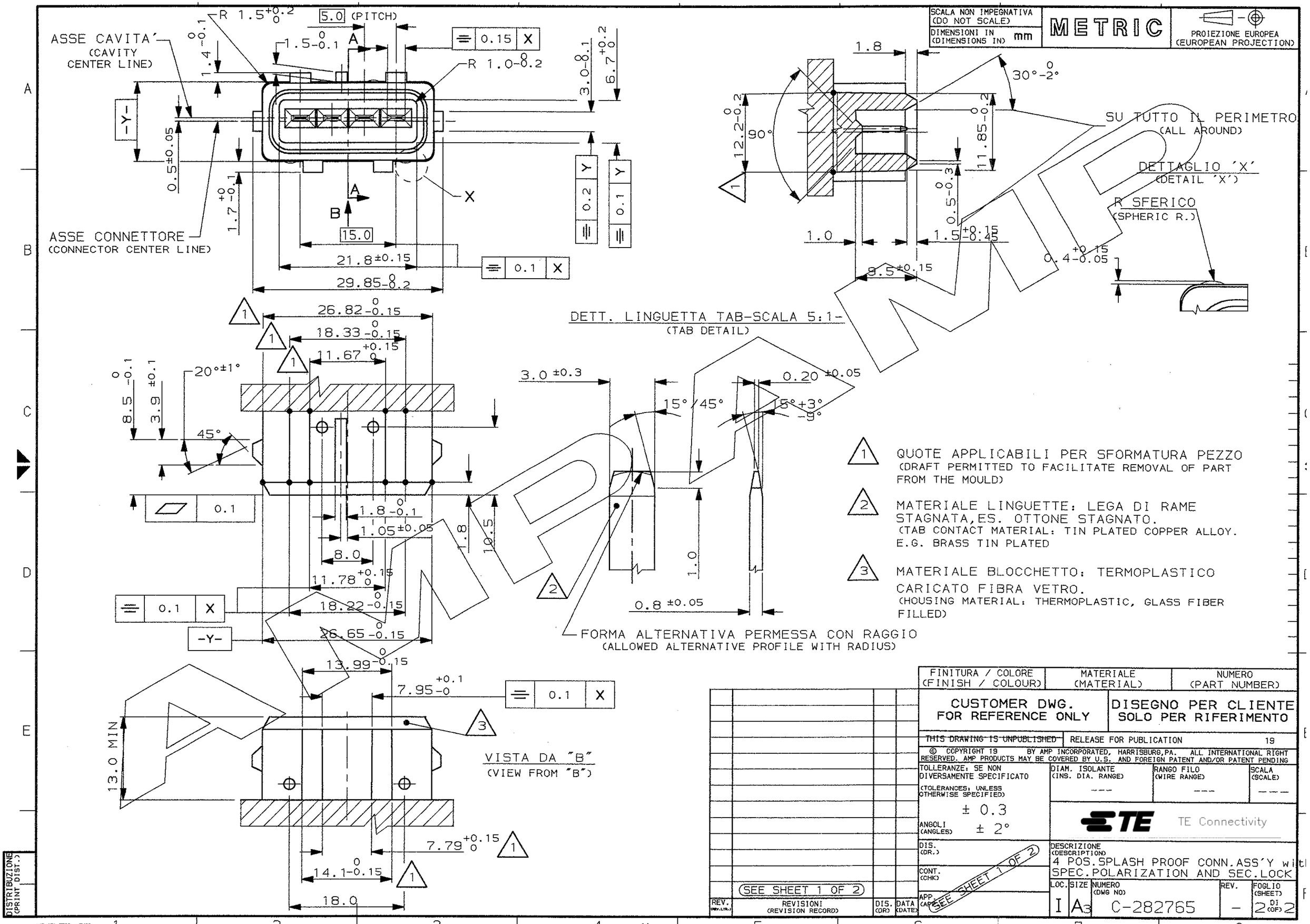


| FINITURA / COLORE (FINISH / COLOUR) | MATERIALE (MATERIAL) | NUMERO (PART NUMBER) |
|---|---|---|
| CUSTOMER DWG. FOR REFERENCE ONLY | DISEGNO PER CLIENTE SOLO PER RIFERIMENTO | |

~~THIS DRAWING IS UNPUBLISHED~~ RELEASE FOR PUBLICATION 19

© COPYRIGHT 19 BY AMP INCORPORATED, HARRISBURG, PA. ALL INTERNATIONAL RIGHT RESERVED. AMP PRODUCTS MAY BE COVERED BY U.S. AND FOREIGN PATENT AND/OR PATENT PENDING

TOLLERANZE: SE NON DIVERSAMENTE SPECIFICATO (TOLERANCES, UNLESS OTHERWISE SPECIFIED) ± 0.3
ANGOLI (ANGLES) ± 2°

| DIAM. ISOLANTE (INS. DIA. RANGE) | RANGO FILO (WIRE RANGE) | SCALA (SCALE) |
|---|---|---|
| --- | --- | --- |

TE Connectivity

DIS. (DR.)
CONT. (CHK)
APP. (APP.)
SEE SHEET 1 OF 2

DESCRIZIONE (DESCRIPTION)
4 POS. SPLASH PROOF CONN. ASS'Y with SPEC. POLARIZATION AND SEC. LOCK

| LOC. | SIZE | NUMERO (DWG NO) | REV. | FOGLIO (SHEET) |
|---|---|---|---|---|
| I | A3 | C-282765 | – | 2 DI (OF) 2 |

SEE SHEET 1 OF 2

| REV. (REV. LTR.) | REVISIONI (REVISION RECORD) | DIS. (DR) | DATA (DATE) |
|---|---|---|---|

DISTRIBUZIONE (PRINT DIST.)

AMP-ITA 7523 - 5/82