© 2019 TE Connectivity. All Rights Reserved.

REVISIONS					
P	LTR	DESCRIPTION	DATE	DWN	APVD
	A	INITIAL RELEASE	07APR2021	CN	HC
	A1	REVISED PER ECN-24-269547	10JUN2024	CKM	HC

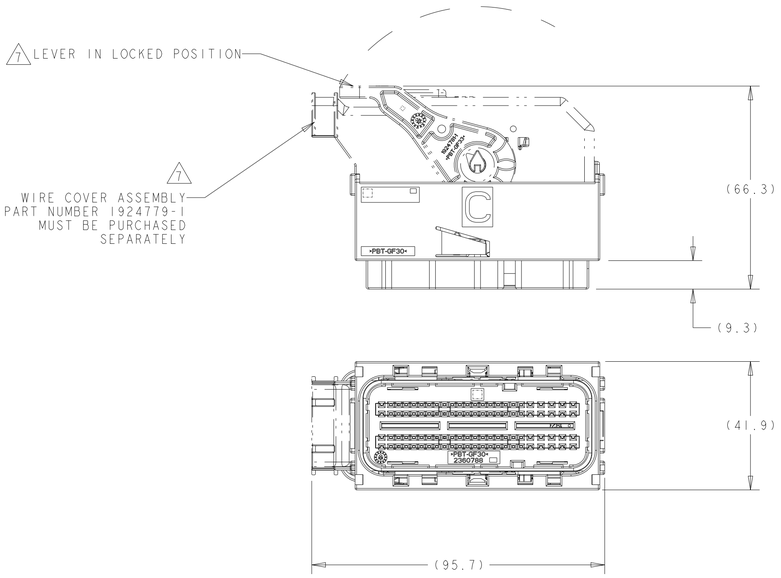

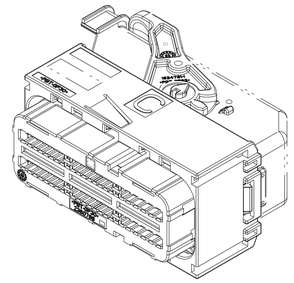

ISOMETRIC VIEW
SCALE 1:1

LEFT EXIT PLUG ASSEMBLY SHOWN
WITH OPTIONAL
WIRE COVER ASSEMBLY
(MUST BE PURCHASED SEPARATELY)
SCALE 1:1

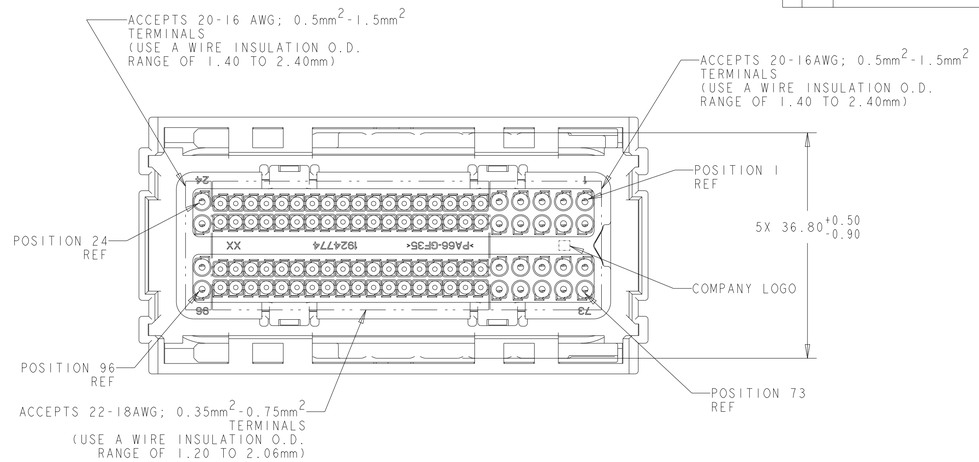

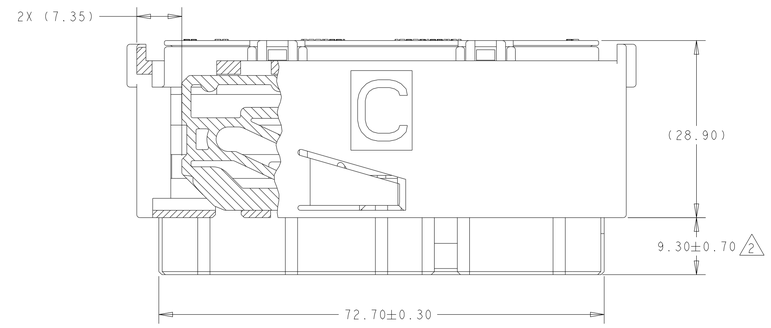

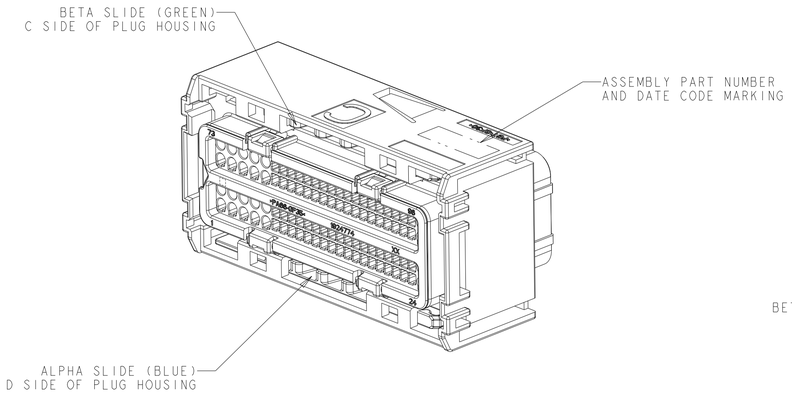

(METHOD FOR IDENTIFYING
EXIT ORIENTATION)

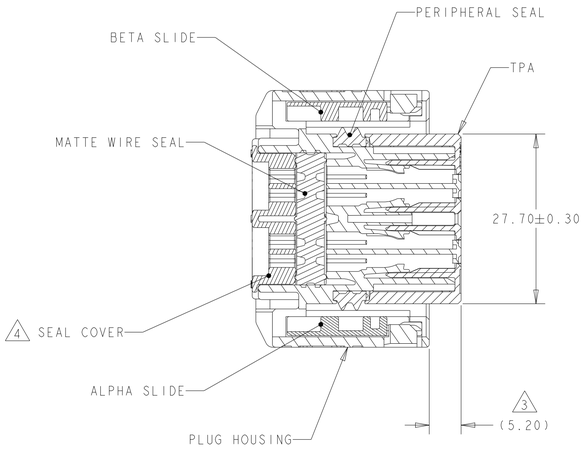

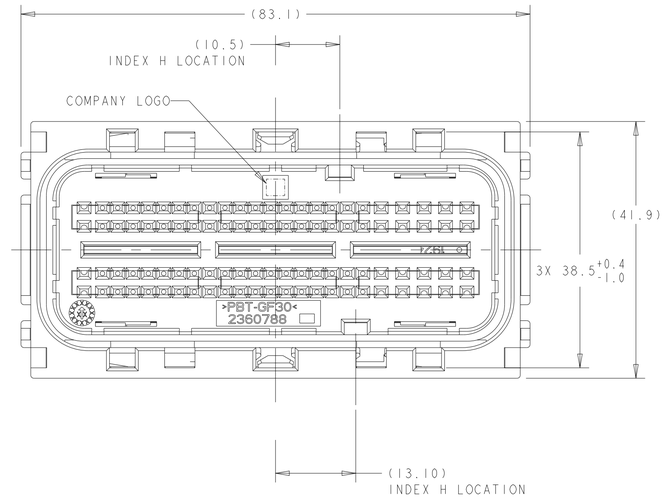

1. PLUG HOUSING: PBT, BLACK
   SEAL COVER: NYLON 6/6, BLACK.
   TPA: PBT, COLOR - SEE TABLE.
   MATTE WIRE SEAL: SILICONE, LIGHT BLUE.
   PERIPHERAL SEAL: SILICONE, GREEN.
   ALPHA SLIDE: NYLON 6/6, BLUE.
   BETA SLIDE: NYLON 6/6, GREEN.

2. TPA SHOWN IN PRE-LATCHED, AS SHIPPED, POSITION.

3. TPA SHOWN IN CLOSED POSITION.

4. SEE TABLE ON SHEET 2 FOR SEAL COVER PIN OUT CONFIGURATION.

5. PLUG ASSEMBLY MATES WITH TE CONNECTIVITY INTERFACE DRAWING 1924771_INT, POLARIZATION A.

6. PLUG ASSEMBLY WILL ACCEPT THE FOLLOWING GET TERMINAL PART NUMBERS: 1393364-1 (GOLD 22AWG; 0.35mm²)
   1393365-1 (GOLD 18-20AWG; 0.75mm²-0.5mm²)
   1924878-1 (TIN/SILVER 22AWG; 0.35mm²)
   1924879-1 (TIN/SILVER 18-20AWG; 0.75mm²-0.5mm²)
   1924782-1 (TIN/SILVER 1.0mm²)
   1924880-1 (TIN/SILVER 16AWG; 1.5mm²)

7. WIRE DRESS ASSEMBLY MUST BE INSTALLED ONTO PLUG ASSEMBLY WITH LEVER IN LOCKED POSITION.

8. APPLICATION SPEC'S: 408-10229, 408-10230

9. FORCE TO SEAT TPA COMPONENT FROM PRE-SET TO LOCKED (FULLY LOADED W/ TERMINALS) TO BE 83N MAX.

10. FORCE TO MOVE TPA FROM FULLY LOCKED TO PRE-SET TO BE 115N MAX. FLAT BLADE SCREWDRIVER SUGGESTED FOR REMOVAL OF TPA.

11. PRELIMINARY - NOT RELEASED TO PRODUCTION.

ALL CLOSED	BLUE	H	9-2498866-9
SEE TABLE 2, SH2	BLUE	H	2498866-8
ALL OPEN	BLUE	H	2498866-1
BLOCKED CIRCUITS	TPA COLOR	INDEX REF	PART NUMBER

THIS DRAWING IS A CONTROLLED DOCUMENT.

DIMENSIONS: mm

TOLERANCES UNLESS OTHERWISE SPECIFIED:
0 PLC ±-
1 PLC ±-
2 PLC ±0.25
3 PLC ±-
4 PLC ±-
ANGLES ±-

MATERIAL - 1
FINISH - -

DWN 19SEP2019 M.KUMAR
CHK 23SEP2019 H.CASTELLANOS
APVD 23SEP2019 H.CASTELLANOS
PRODUCT SPEC TBD
APPLICATION SPEC - 8
WEIGHT -

TE Connectivity

NAME PLUG ASSEMBLY, 96 POSITION, INDEX H - LEFT EXIT, SEALED, GPEC III

SIZE A1 | CAGE CODE 00779 | DRAWING NO C-2498866 | RESTRICTED TO

CUSTOMER DRAWING | SCALE 2:1 | SHEET 1 OF 2 | REV A1

4805 (3/13)

© 2019 TE Connectivity. All Rights Reserved.

REVISIONS				
P	LTR	DESCRIPTION	DATE	DWN	APVD
	-	SEE SHEET 1	-	-	-

PRODUCTION PARTS

| VEHICLE PLATFORM/APPLICATION | 1 | 2 | 3 | 4 | 5 | 6 | 7 | 8 | 9 | 10 | 11 | 12 | 13 | 14 | 15 | 16 | 17 | 18 | 19 | 20 | 21 | 22 | 23 | 24 | 25 | 26 | 27 | 28 | 29 | 30 | 31 | 32 | 33 | 34 | 35 | 36 | 37 | 38 | 39 | 40 | 41 | 42 | 43 | 44 | 45 | 46 | 47 | 48 | 49 | 50 | 51 | 52 | 53 | 54 | 55 | 56 | 57 | 58 | 59 | 60 | 61 | 62 | 63 | 64 | 65 | 66 | 67 | 68 | 69 | 70 | 71 | 72 | 73 | 74 | 75 | 76 | 77 | 78 | 79 | 80 | 81 | 82 | 83 | 84 | 85 | 86 | 87 | 88 | 89 | 90 | 91 | 92 | 93 | 94 | 95 | 96 | PART NUMBER |
|---|---|---|---|---