© 2024 TE Connectivity. All Rights Reserved.

REVISIONS					
P	LTR	DESCRIPTION	DATE	DWN	APVD
	A	ECN-24-277362	29JUL2024	S.W	E.J

MATING SIDE

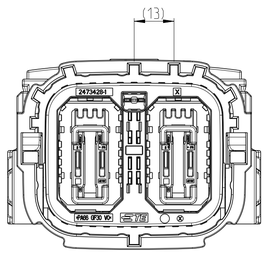

1 CODING A (2474011-1)

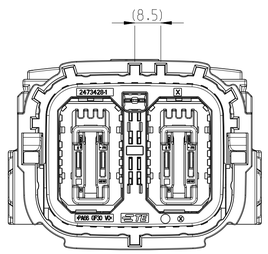

CODING B (2474011-2)

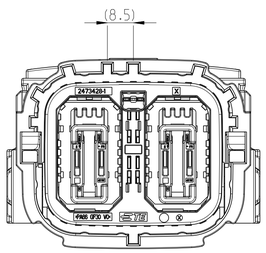

CODING C (2474011-3)

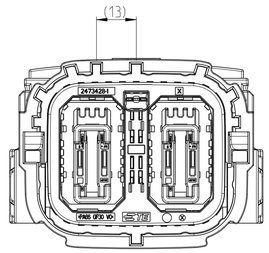

CODING D (2474011-4)

1. CODING VIEW
2. LEVER IN END-LOCKING POSITION
3. CPA IN END-LOCKING POSITION
4. TPA IN PRE-LOCK POSITION
5. LASER PRINTTING FOLLOING DETAILS MUST BE INCLUDED ASSEMBLY
   P/N AND DATE CODE (YY-MM-DD HH:MM:SS)
6. DMC CODE
7. MATE CONNECTOR : 2POS.21MM.HEADER HSG. ASSY TE PART NO.: 2468601
8. WIRE RANGE:
   50 MM² UNSHILED WIRE OD:15.2~15.8mm
   70 MM² UNSHILED WIRE OD:17.4~18.2mm
   95 MM² UNSHILED WIRE OD:20.1~20.9mm

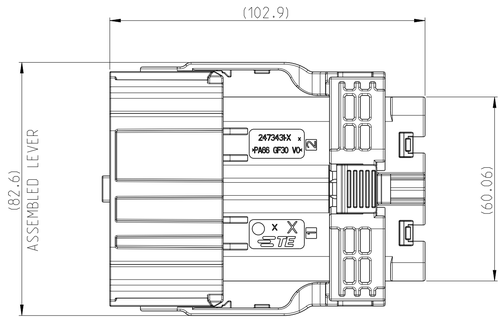

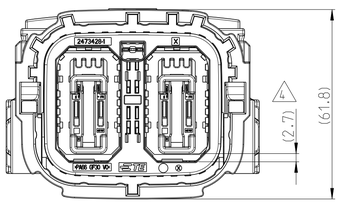

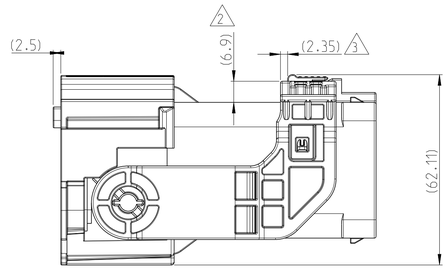

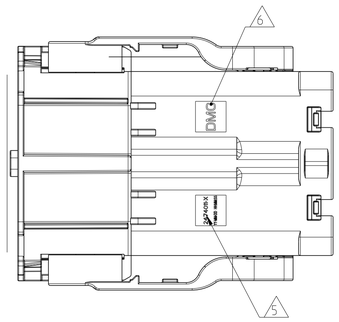

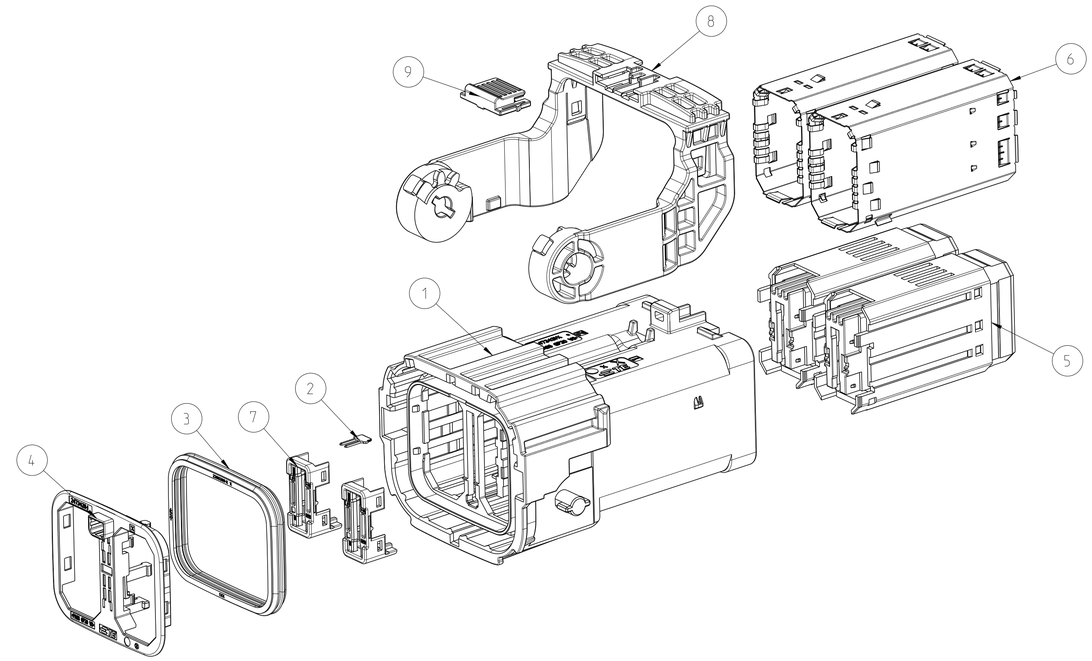

2474011-4	2474011-3	2474011-2	2474011-1	DESCRIPTION	MATERIAL	SURFACE COLOUR	ITEM
1	1	1	1	CPA	PA66 GF30 V0	RED	9
1	1	1	1	2POS.21MM.LEVER.180 DEG	PA6 GF18 V0	BLACK	8
2	2	2	2	2POS.CSJ21.180DEG.TPA	PA66 GF30 V0	RED	7
2	2	2	2	SHIELD.CSJ21.CONN HSG.180DEG	COPPER ALLOY	-	6
2	2	2	2	2POS.21MM.INNER HSG.180 DEG	PA66 GF30 V0	BLACK	5
1	1	1	1	SEAL RETAINER.2POS.CSJ21.180DEG	PA66 GF30 V0	BLACK	4
1	1	1	1	2POS.21MM.PERIPHERAL SEAL	SILICON RUBBER	BLACK	3
1	1	1	1	SHUNT BAR	COPPER ALLOY	-	2
1	-	-	-	2POS.CSJ21.REC HSG.180DEG.SLD	PA66 GF30 V0	ORANGE	1
-	1	-	-	2POS.CSJ21.REC HSG.180DEG.SLD	PA66 GF30 V0	ORANGE	
-	-	1	-	2POS.CSJ21.REC HSG.180DEG.SLD	PA66 GF30 V0	ORANGE	
-	-	-	1	2POS.CSJ21.REC HSG.180DEG.SLD	PA66 GF30 V0	ORANGE	
D	C	B	A	CODING			
QTY PER ASSY PARTS							

THIS DRAWING IS A CONTROLLED DOCUMENT.

DIMENSIONS: mm

TOLERANCES UNLESS OTHERWISE SPECIFIED
0 PLC ±
1 PLC ±0.5
2 PLC ±0.01
3 PLC ±0.001
4 PLC ±0.0001
ANGLES ±

MATERIAL: SEE TABLE
FINISH: -

DWN S.WANG 29JUL2024
CHK F.MA 29JUL2024
APVD E.JIANG 29JUL2024
PRODUCT SPEC 108-160483
APPLICATION SPEC 114-160267
WEIGHT 251.2g

TE Connectivity

NAME 2POS.CSJ21.REC HSG ASSY.180DEG.SLD.HVIL

SIZE	CAGE CODE	DRAWING NO	RESTRICTED TO
A1	00779	C-2474011	-

CUSTOMER DRAWING | SCALE 1:1 | SHEET 1 OF 1 | REV A

4805 (3/13)