© 2021 TE Connectivity. All Rights Reserved.

REVISIONS					
P	LTR	DESCRIPTION	DATE	DWN	APVD
	A	INITIAL RELEASE	15FEB23	S.L	J.Z
	A1	ECN-24-285444	20SEP24	J.H	J.Z

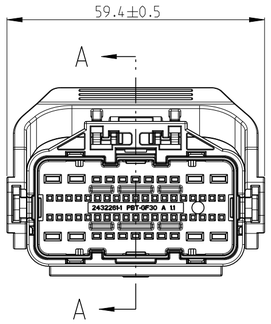

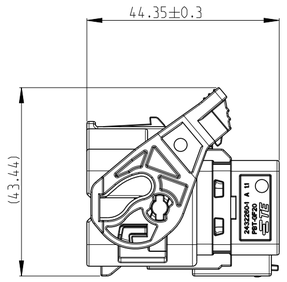

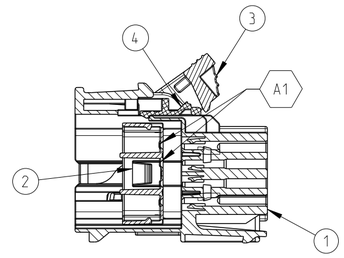

SECTION A-A

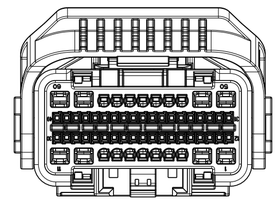

NOTE:
1.ITEM 3 & 4 AT PRE-LOCK POSITION FOR DELIVERY

2.INLINE PLUG ASSY:*-2432266-1

3.SUITABLE ONE PIECE RETAINER:2432265-1

4.SUITABLE TERMINAL
2385474 FOR 0.64mm TERMIAL
2386053 FOR 1.2mm TERMINAL
2386301 FOR 2.8mm TERMINAL

5.SUITABLE CLIP
2299651-1 FOR CLIP CODE A
2322574-1 FOR CLIP CODE B

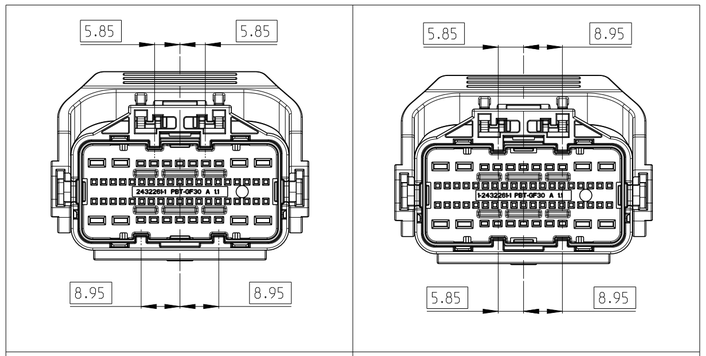

INTERFACE CODE A | INTERFACE CODE B

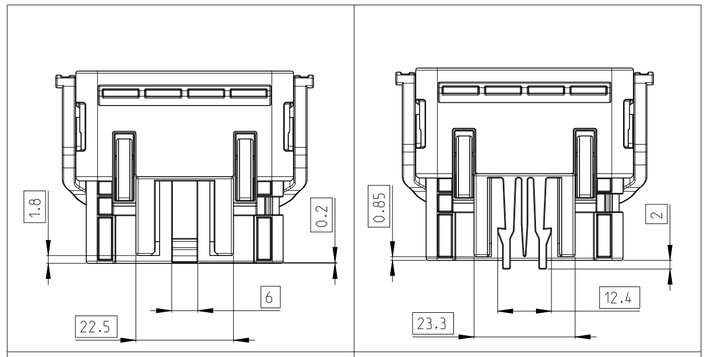

CLIP CODE A | CLIP CODE B

ASS'Y P/N	INTERFACE CODE	CLIP CODE	COMPONENT	MATERIAL	COLOR	Q'TY	ITEM
1-2432259-3 (WITHOUT CPA)	B	B	LEVER	PBT-GF30	BLACK	1	3
			PPP	PBT-GF30	NATURAL	1	2
			MALE HSG	PBT-GF20	NATURAL	1	1
1-2432259-2 (WITHOUT CPA)	B	A	LEVER	PBT-GF30	BLACK	1	3
			PPP	PBT-GF30	NATURAL	1	2
			MALE HSG	PBT-GF20	NATURAL	1	1
1-2432259-1 (WITH CPA)	B	A	CPA	PBT-GF30	NATURAL	1	4
			LEVER	PBT-GF30	BLACK	1	3
			PPP	PBT-GF30	NATURAL	1	2
			MALE HSG	PBT-GF20	NATURAL	1	1
2432259-3 (WITHOUT CPA)	A	B	LEVER	PBT-GF30	BLACK	1	3
			PPP	PBT-GF30	BLACK	1	2
			MALE HSG	PBT-GF20	BLACK	1	1
2432259-2 (WITHOUT CPA)	A	A	LEVER	PBT-GF30	BLACK	1	3
			PPP	PBT-GF30	BLACK	1	2
			MALE HSG	PBT-GF20	BLACK	1	1
2432259-1 (WITH CPA)	A	A	CPA	PBT-GF30	NATURAL	1	4
			LEVER	PBT-GF30	BLACK	1	3
			PPP	PBT-GF30	BLACK	1	2
			MALE HSG	PBT-GF20	BLACK	1	1

THIS DRAWING IS A CONTROLLED DOCUMENT.

DIMENSIONS: mm

TOLERANCES UNLESS OTHERWISE SPECIFIED:
0 PLC ±/
1 PLC ±/
2 PLC ±/
3 PLC ±/
4 PLC ±/
ANGLES ±

MATERIAL: SEE TABLE
FINISH: SEE TABLE

DWN S.LEE 27OCT2021
CHK A.DANG 27OCT2021
APVD J.ZONG 27OCT2021
PRODUCT SPEC 108-160730
APPLICATION SPEC 114-160493
WEIGHT -

TE Connectivity

NAME 60P.MALE HSG ASS'Y
-
-

SIZE	CAGE CODE	DRAWING NO	RESTRICTED TO
A2	00779	C-2432259	-

CUSTOMER DRAWING | SCALE 1:1 | SHEET 1 OF 1 | REV A1

1471-9 (3/13)