© 2019 TE Connectivity. All Rights Reserved.

REVISIONS					
P	LTR	DESCRIPTION	DATE	DWN	APVD
	1	INTIAL RELEASE	12MAY19	GZ	IY
	A	ECR-19-016436	24OCT2019	GZ	EJ
	A2	ECN-23-209569	23APR23	J.H	J.Z

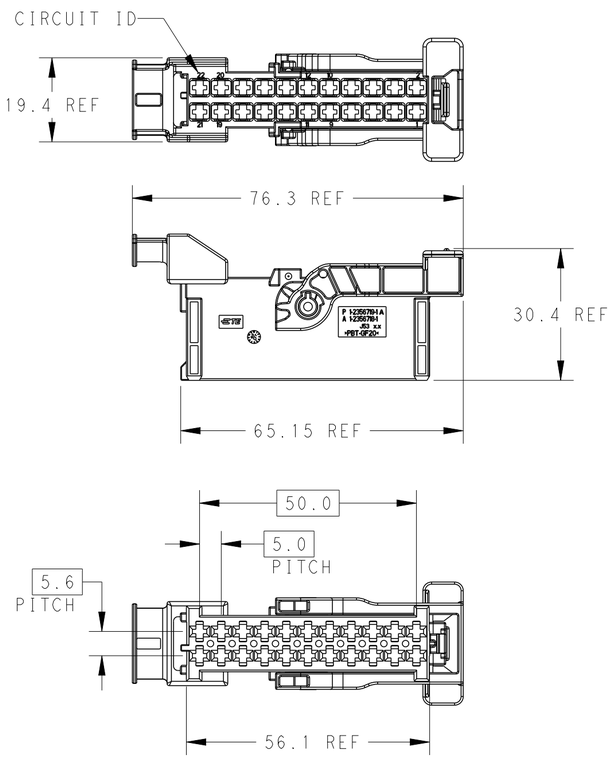

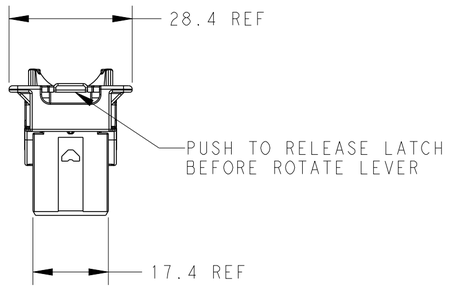

1-2356718-1 LEVER IN END-LOCK POSITION AS SHOWN
(WITH WIRE DRESS, DELIVERY CONDITION)

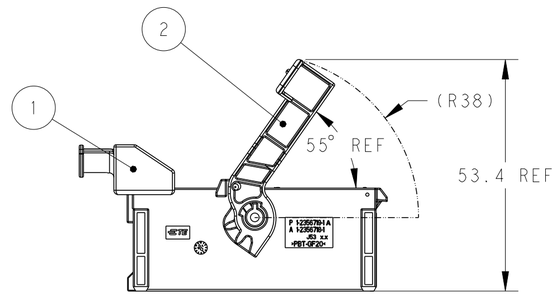

1-2356718-1 LEVER IN PRE-LOCK POSITION
(BEFORE MATE WITH COUNTERPART)

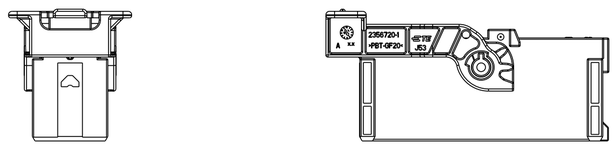

2356718-1 LEVER IN END-LOCK POSITION
(WITHOUT WIRE DRESS)

1. BULK PACKAGING
2. LEVER DELIVERY CONDITION: IN END-LOCK POSITION
   RELEASE LATCH AND ROTATE LEVER IN PRE-LOCK POSITION
   BEFORE MATING WITH COUNTERPART
3. SUITABLE TPA: 2356721
   ENGAGEMENT FORCE:50N MAX,DISENGAGEMENT FORCE:10~50N
4. SUITABLE TERMINAL AS TABLE SHOWN
5. INTERFACE DRAWING: 114-32228

	1	1	1	1			LEVER	PBT-GF20	BLACK	2
NOT TOOLED	1				A	WITH	HOUSING	PBT-GF20	BLACK	1
		1			Z	WITH	HOUSING	PBT-GF20	BLACK	1
NOT TOOLED			1		A	W/O	HOUSING	PBT-GF20	BLACK	1
				1	Z	W/O	HOUSING	PBT-GF20	BLACK	1
STATUS	1-*-2	1-*-1	*-2	*-1	CODE	WIRE DRESS	DESCRIPTION	MATERIAL	COLOR	ITEM
	TE ASSY NO									

A2

1-968851-1	1.5-2.5	2.2-3.0	PRE-TIN
1-968849-1	0.5-1.0	1.4-2.1	
1-2141857-1 OR 1-968880-1	0.2-0.5	1.2-1.4	
TE PART NO	WIRE SIZE (mm^2) (REF)	INSULATION SIZE (mm)(REF)	FINISH
MCP2.8 TERMINAL (APPLICATION 114-18148)			

THIS DRAWING IS A CONTROLLED DOCUMENT.

DIMENSIONS: mm

TOLERANCES UNLESS OTHERWISE SPECIFIED:
0 PLC ±-
1 PLC ±0.3
2 PLC ±0.3
3 PLC ±-
4 PLC ±-
ANGLES ±-

MATERIAL -
FINISH -

DWN G. ZHU 12MAY2019
CHK E. JIANG 12MAY2019
APVD T. YIN 12MAY2019
PRODUCT SPEC 108-32304
APPLICATION SPEC 114-32246
WEIGHT -

TE Connectivity

NAME 22POS,AMP MCP 2.8,REC HSG ASSY

SIZE A2 | CAGE CODE 00779 | DRAWING NO C-2356718 | RESTRICTED TO -

CUSTOMER DRAWING | SCALE 1:1 | SHEET 1 OF 1 | REV A2