THIS DRAWING IS UNPUBLISHED. RELEASED FOR PUBLICATION 2018
© COPYRIGHT 2018 BY TE CONNECTIVITY ALL RIGHTS RESERVED.

REVISIONS

P	LTR	DESCRIPTION	DATE	DWN	APVD
	A	RELEASE PER ECO-19-003803	13MAR2019	JAB	NLE
	A1	REVISED PER ECO-20-009512	07JUL2020	CN	AC
	A2	REVISED PER ECN-22-138216	14FEB2022	VS	AC
	A3	REVISED PER ECN-22-155286	22MAY2022	VS	AC

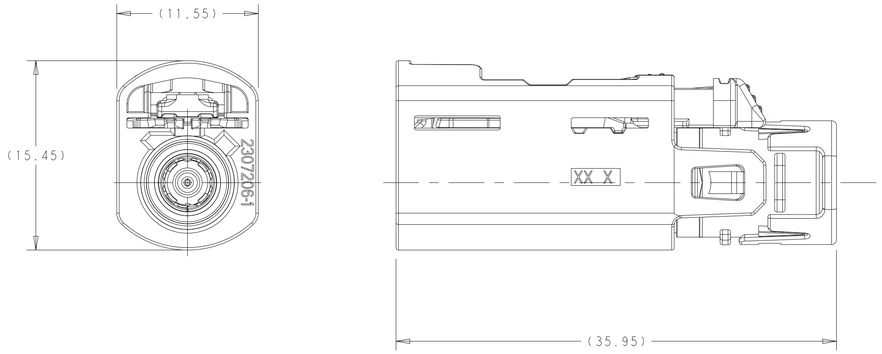

FIGURE 1
(NO CLIP SLOT)
SCALE 4:1

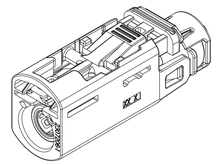

ISOMETRIC VIEW
SCALE 2:1

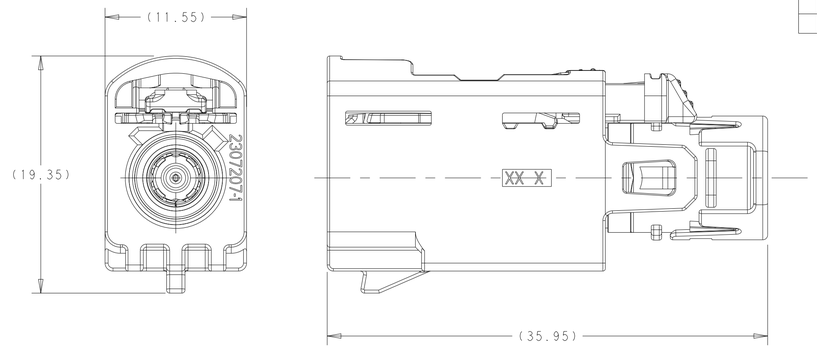

FIGURE 2
(WITH BODY CLIP SLOT)
SCALE 4:1

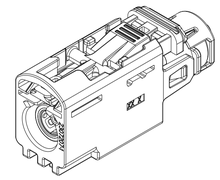

ISOMETRIC VIEW
SCALE 2:1

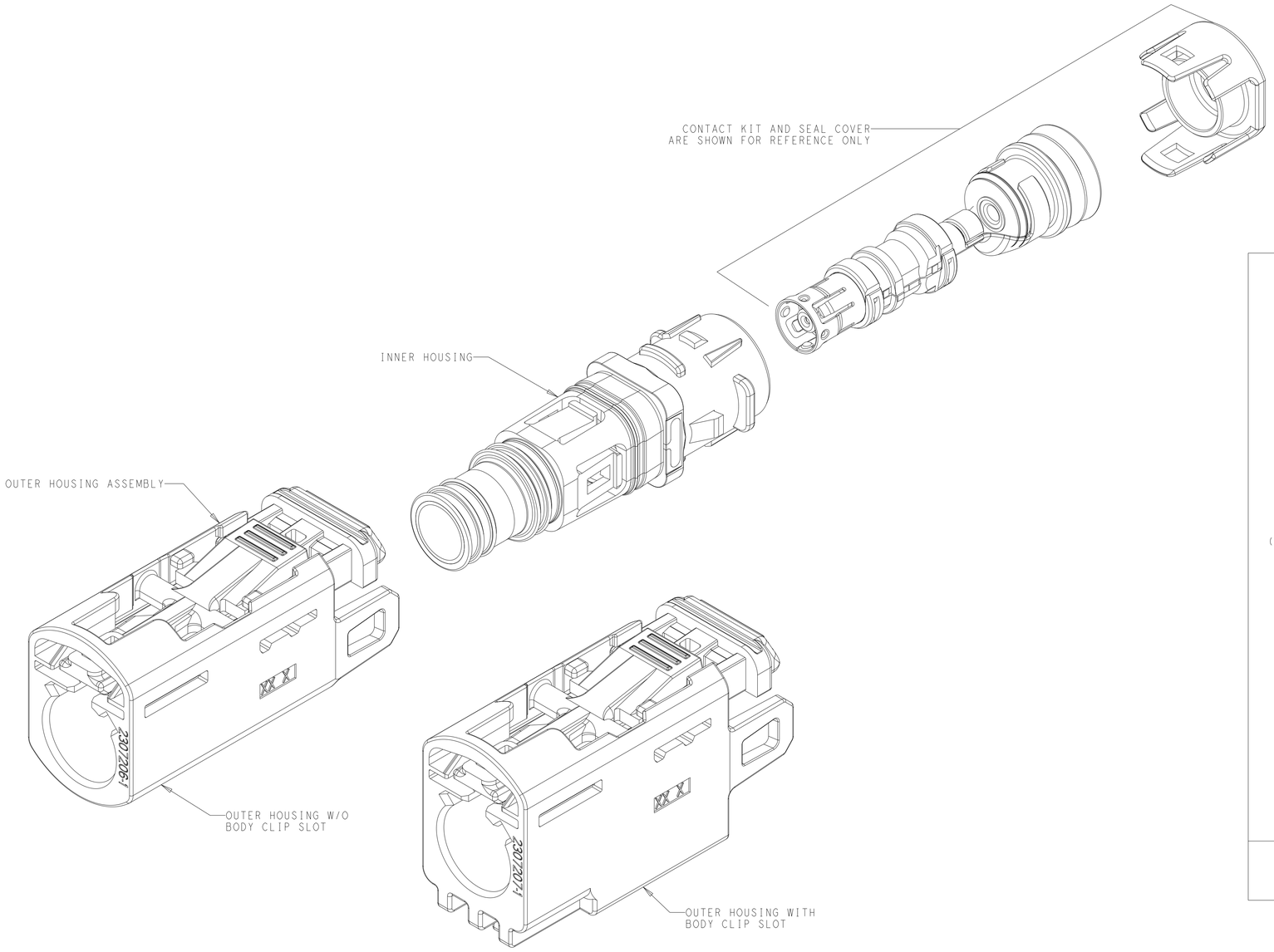

2272870-X (REFER TO CONTACT KIT DRAWING C-2272870 FOR CABLE SPECIFIC COMPONENTS)	YES	2307194-2	WATER BLUE	Z	2-2307361-0	3-2304242-9
			PASTEL GREEN	N	1-2307361-3	3-2304242-3
			PASTEL ORANGE	M	1-2307361-2	3-2304242-2
			CARMINE RED	L	1-2307361-1	3-2304242-1
			CURRY	K	1-2307361-0	3-2304242-0
			BEIGE	I	2307361-9	2-2304242-9
			HEATHER VIOLET	H	2307361-8	2-2304242-8
			BLUE GREY	G	2307361-7	2-2304242-7
			NUT BROWN	F	2307361-6	2-2304242-6
			LEAF GREEN	E	2307361-5	2-2304242-5
			CLARET VIOLET	D	2307361-4	2-2304242-4
			SIGNAL BLUE	C	2307361-3	2-2304242-3
			CREAM	B	2307361-2	2-2304242-2
			JET BLACK	A	2307361-1	2-2304242-1
	NO	2307194-2	WATER BLUE	Z	2-2307383-0	1-2304242-9
			PASTEL GREEN	N	1-2307383-3	1-2304242-3
			PASTEL ORANGE	M	1-2307383-2	1-2304242-2
			CARMINE RED	L	1-2307383-1	1-2304242-1
			CURRY	K	1-2307383-0	1-2304242-0
			BEIGE	I	2307383-9	2304242-9
			HEATHER VIOLET	H	2307383-8	2304242-8
			BLUE GREY	G	2307383-7	2304242-7
			NUT BROWN	F	2307383-6	2304242-6
			LEAF GREEN	E	2307383-5	2304242-5
			CLARET VIOLET	D	2307383-4	2304242-4
			SIGNAL BLUE	C	2307383-3	2304242-3
			CREAM	B	2307383-2	2304242-2
			JET BLACK	A	2307383-1	2304242-1
CABLE ASSEMBLY QTY=1	BODY CLIP SLOT FEATURES	INNER HOUSING QTY=1	OUTER HOUSING COLOR	KEY CODE	PART NUMBER	PART NUMBER
			OUTER HOUSING ASSEMBLY QTY=1			

NOTE 1: 3D MODEL CREATED WITH CABLE COMPONENTS TO REPRESENT CONNECTOR ENVELOPE.

NOTE 2: ALL INDIVIDUAL COMPONENTS MUST BE PURCHASED SEPARATELY.

THIS DRAWING IS A CONTROLLED DOCUMENT.

DIMENSIONS: mm

TOLERANCES UNLESS OTHERWISE SPECIFIED:
0 PLC ±-
1 PLC ±-
2 PLC ±-
3 PLC ±-
4 PLC ±-
ANGLES ±-

MATERIAL - -
FINISH - -

DWN D.J.HARDY 31JAN2017
CHK N.L.EVANS 02FEB2017
APVD N.F.SCHROLL 02FEB2017
PRODUCT SPEC -
APPLICATION SPEC 114-32145
WEIGHT -

TE Connectivity

NAME CONNECTOR ASSEMBLY, FEMALE, 180 DEGREE, SEALED, FAKRA AUTOMATED
-

SIZE A1 | CAGE CODE 00779 | DRAWING NO C-2304242 | RESTRICTED TO -

CUSTOMER DRAWING | SCALE 5:1 | SHEET 1 OF 1 | REV A3

4805 (3/13)