THIS DRAWING IS UNPUBLISHED. RELEASED FOR PUBLICATION -
© COPYRIGHT - BY - ALL RIGHTS RESERVED.

LOC	DIST
-	-

REVISIONS

P	LTR	DESCRIPTION	DATE	DWN	APVD
	A	RELEASED PER ECO 14-003827	3-27-14	CT	DH

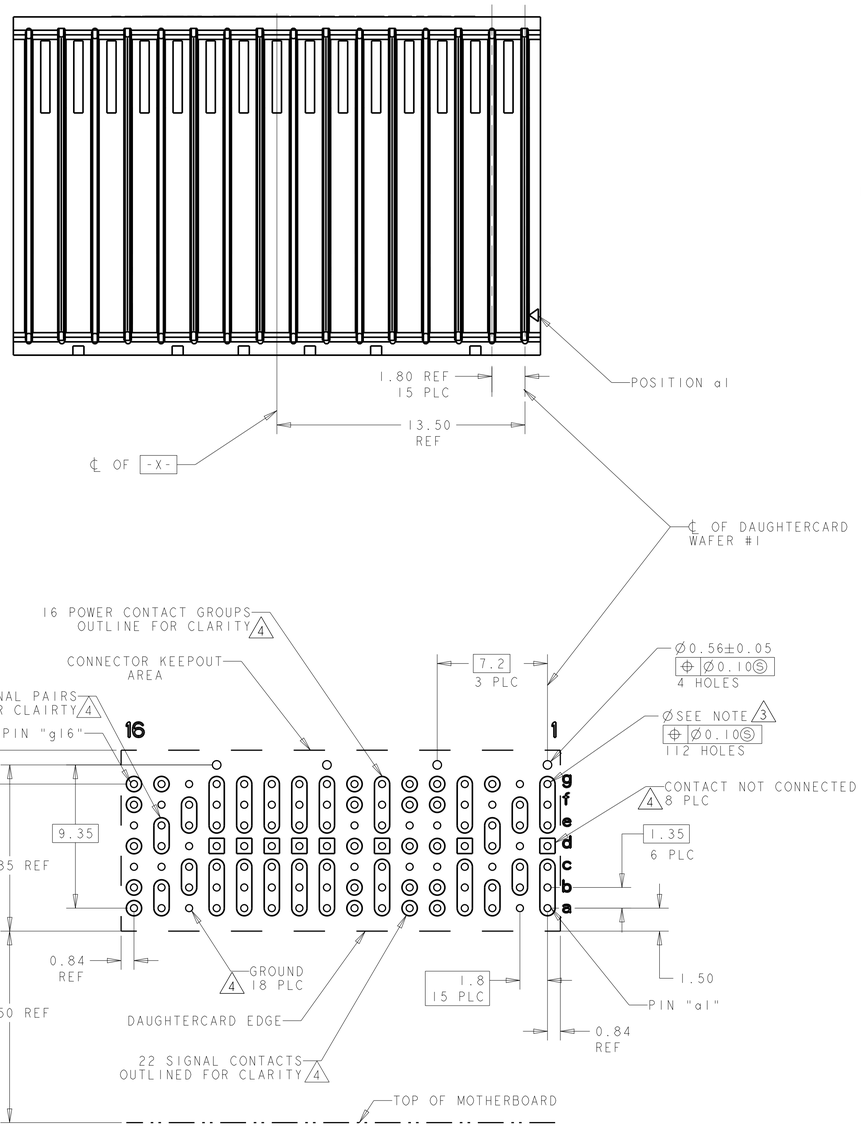

PC BOARD LAYOUT
(CONNECTOR SIDE)
SCALE 5:1

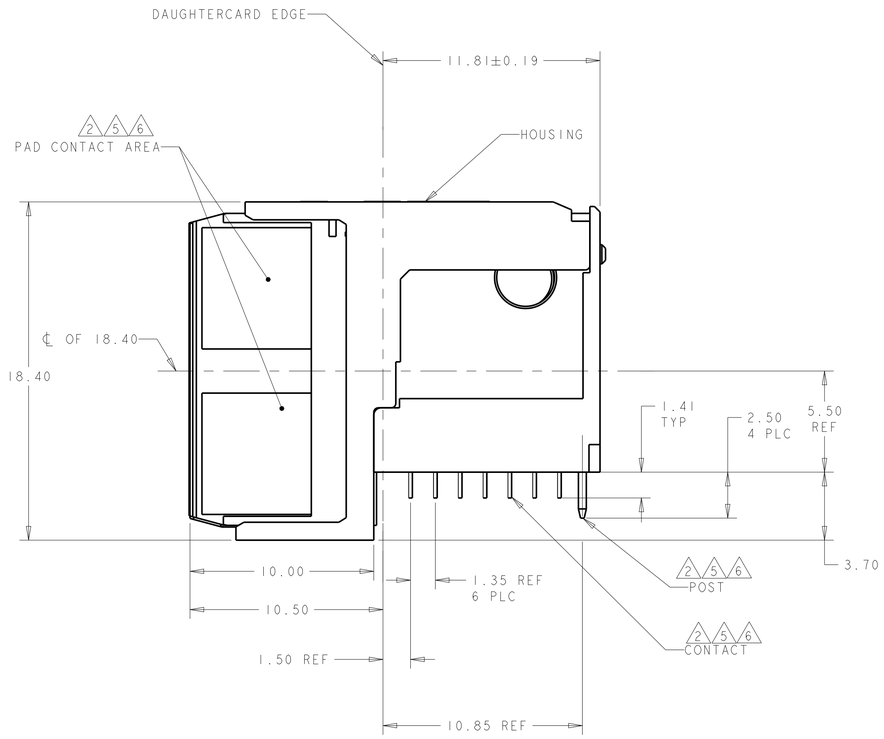

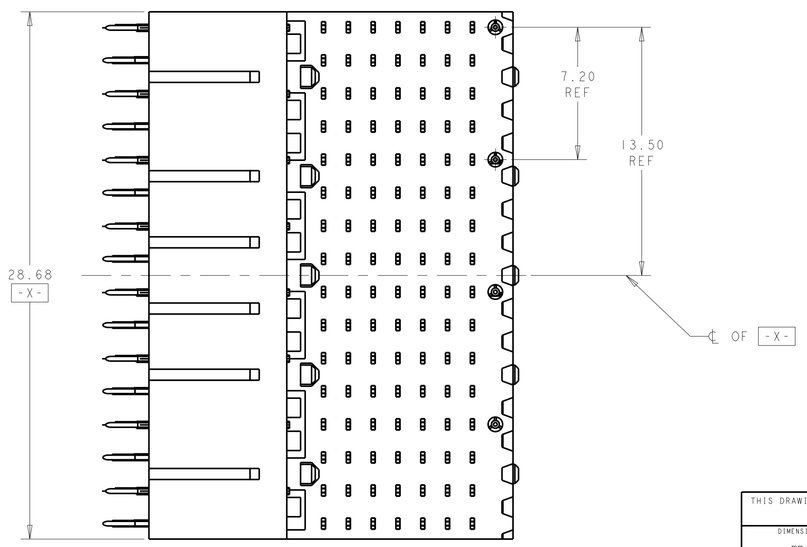

1. HOUSING: LCP, UL94V0, COLOR: BLACK.
CONTACT: PHOSPHOR BRONZE.
POST: BRASS WIRE

2. CONTACT: 1.27µm MIN GOLD IN PAD CONTACT AREA
1.27µm MIN TIN-LEAD (93/7) ON PCB TAIL
OVER 1.27µm MIN NICKEL OVER ALL.
POST 1.27µm MIN NICKEL PLATED.

3. PLATED THROUGH HOLE PER 114-13056, FIGURE 4

4. SEE TABLE 1 FOR INTERCONNECTIONS TO
BACKPLANE CONNECTOR.

5. CONTACT: 1.27µm MIN GOLD IN PAD CONTACT AREA,
1.27µm MIN TIN ON PCB TAIL OVER 1.27µm MIN.
NICKEL OVER ALL.
POST: 1.27µm MIN NICKEL PLATED.

6. CONTACT: 1.27µm MIN GOLD IN PAD CONTACT AREA
1.27µm MIN TIN-LEAD (60/40) ON PCB TAIL
OVER 1.27µm MIN NICKEL OVER ALL.
POST 1.27µm MIN NICKEL PLATED.

TABLE 1
"x" DESIGNATES THE COLUMN NUMBER

TYPICAL INTERCONNECTIONS FOR COLUMN (WAFER) 3,15		
CONTACT USAGE	DAUGHTERCARD CONNECTOR PIN	BACKPLANE CONNECTOR PIN
SIGNAL PAIR	ax	ax
SIGNAL PAIR	bx	bx
SIGNAL PAIR	dx	ex
SIGNAL PAIR	ex	fx
SIGNAL PAIR	gx	ix
GROUNDS	cx, fx (ALL COMMONED)	cx, dx, gx, hx

TYPICAL INTERCONNECTIONS FOR COLUMN (WAFER) 2,14		
CONTACT USAGE	DAUGHTERCARD CONNECTOR PIN	BACKPLANE CONNECTOR PIN
SIGNAL PAIR	bx	cx
SIGNAL PAIR	cx	dx
SIGNAL PAIR	ex	gx
SIGNAL PAIR	fx	hx
GROUNDS	ax, dx, gx (ALL COMMONED)	ax, bx, ex, fx, ix

TYPICAL INTERCONNECTIONS FOR COLUMN (WAFER) 5,6,8,16		
CONTACT USAGE	DAUGHTERCARD CONNECTOR PIN	BACKPLANE CONNECTOR PIN
SIGNAL	ax	bx
SIGNAL	bx	cx
SIGNAL	dx	ex
SIGNAL	fx	gx
SIGNAL	gx	hx
GROUNDS	cx, ex (ALL COMMONED)	ax, dx, fx, ix

TYPICAL INTERCONNECTIONS FOR COLUMN (WAFER) 1,4,7,9,10,11,12,13		
CONTACT USAGE	DAUGHTERCARD CONNECTOR PIN	BACKPLANE CONNECTOR PIN
POWER	ax,bx,cx	ax,bx,cx,dx
POWER	ex,fx,gx	fx,gx,hx,ix
NOT CONNECTED	dx	ex

6	2286119-3
5	2286119-2
2	2286119-1
PLATING	PART NO

THIS DRAWING IS A CONTROLLED DOCUMENT.

DIMENSIONS: mm

TOLERANCES UNLESS OTHERWISE SPECIFIED:
0 PLC ±-
1 PLC ±0.5
2 PLC ±0.13
3 PLC ±-
4 PLC ±-
ANGLES ±1°0'

MATERIAL 1

FINISH - SEE TABLE

DWN C.C.THOMAS 3-27-14
CHK D.HOANG 3-27-14
APVD D.HOANG 3-27-14

PRODUCT SPEC 108-2072
APPLICATION SPEC 114-13056
WEIGHT 10.33g

TE Connectivity

NAME RIGHT-ANGLE PLUG ASSEMBLY, 7 ROW, MODULE 16C, 20.3mm, MULTIGIG RT 2-R, DAUGHTERCARD CONNECTOR, VITA 78

SIZE A1 CAGE CODE 00779 DRAWING NO C-2286119 RESTRICTED TO -

Customer Drawing SCALE 5:1 SHEET 1 OF 1 REV A