THIS DRAWING IS UNPUBLISHED. RELEASED FOR PUBLICATION 2018
© COPYRIGHT 2018 TE Connectivity Germany GmbH ALL RIGHTS RESERVED.

PRJ-17-000902106
PRJ-19-000902525

REVISIONS

P	LTR	DESCRIPTION	DATE	DWN	APVD
	B	NEW DRAWING	16JAN2019	DW	BF
	B2	ECR-20-000127	06JAN2020	MM	SR

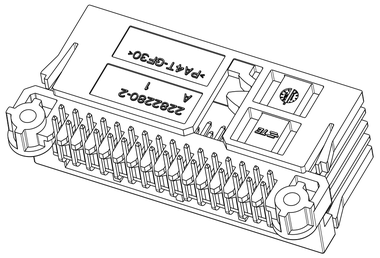

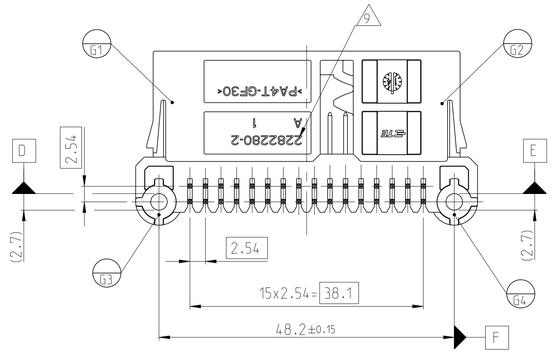

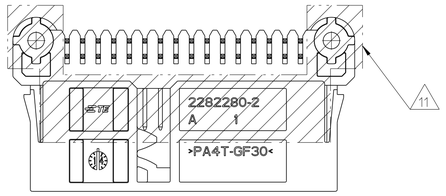

A-A

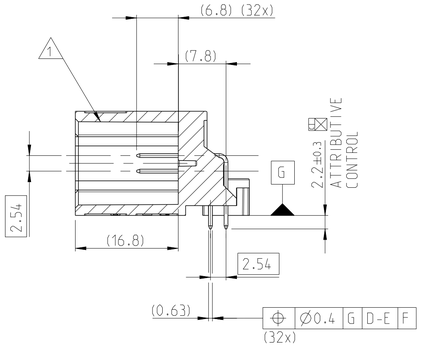

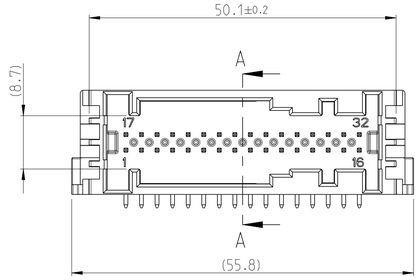

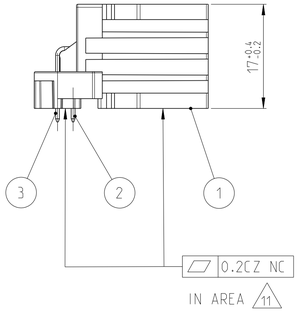

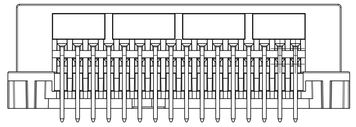

RECOMMENDED PCB LAYOUT
LOADING SIDE
Empfohlenes Leiterplatten Layout
Bestueckungsseite

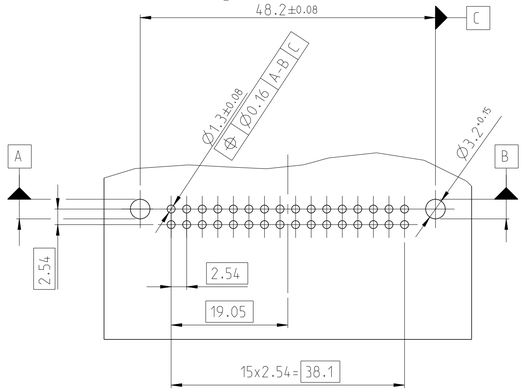

C-C
5:1

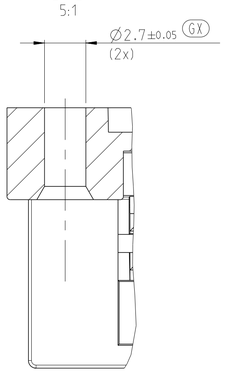

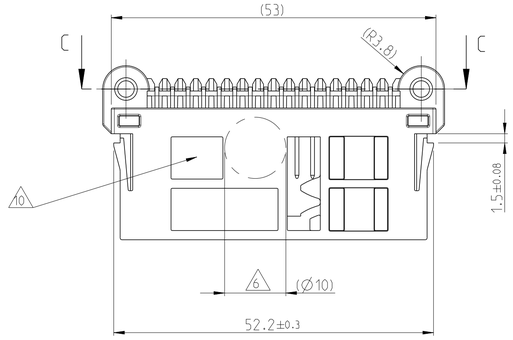

THE PRODUCT PRESENTED WITH THIS DRAWING IS RELEASED HEREBY FOR THE MANUFACTURING OF THE NECESSARY PRODUCTION TOOLS. ADDITIONAL CHANGES WILL BE AT CUSTOMERS EXPENSE.

.....
DATE, FIRM STAMP AND SIGNATURE OF THE CUSTOMER

NOTES
Bemerkung

1. INTERFACE BASED ON TE-SPEC. 114-18063-032. CODING B. REV.A3
   Schnittstelle basiert auf TE-Spez. 114-18063-032. Kodierung B. Rev.A3
2. INTERFACE 114-18063-032 IS PART OF PPAP
   Schnittstelle 114-18063-032 ist Bestandteil des PPAP (B2)
3. INTERFACE RESPONSIBILITY IS AT TE CONNECTIVITY
   Schnittstellenverantwortung liegt bei Fa. TE Connectivity
4. PRESS OUT FORCE >25 N WITH 25 mm/min FOR 0.63mm PINS
   Kontaktausdrueckkraft >25 N mit Vorschub 25mm/min fuer 0.63 Pins
5. PACKING: IN TRAY (SEE PACKAGING-SPEC V2282279)
   Verpackung: In Produktraeger (siehe Verpackungsspezifikation V2282279)
6. VACUMM GRIPPER AREA, FREE OF BURR AND EJECTOR PINS
   Ansaugflaeche, frei von Grat und Auswerfstiften
7. APPLICABLE FOR REFLOW SOLDERING PROCESS
   Anwendbar fuer Reflow-Loetprozess
8. MISSING DIMENSIONS SEE 3D - MODEL
   Fehlenden Maße siehe 3D - Modell
9. TE HOUSING PART NO.
   TE Gehaeuse-Einzelteil-Nr.
10. GOOD PARTS MARKED WITH DOT POINT (SERIES PRODUCTION ONLY)
    Gutteile mit Körnerpunkten markiert (nur Serienteile)
11. AREA FOR FLATNESS MEASUREMENT
    Bereich der Ebenenheitsermittlung
12. TOLERANCE ACC. TO DIN EN ISO 8015, DIN EN ISO 14405-1
    GENERAL TOL. ACC. TO DIN 16742 TG5, EXCEPT ANGLE DIM. (SEE TITLE BLOCK)
    Tolerierung nach DIN EN ISO 8015, DIN EN ISO 14405-1
    Allgemeintoleranzen nach DIN 16742 TG5, ausser Winkelmasse (siehe Schriftkopf)
13. PACKING: IN TRAY WITH PLASTIC BAG (SEE PACKAGING-SPEC V2282279)
    Verpackung: In Produkttraeger mit Beutel (siehe Verpackungsspezifikation V2282279)

TE BESTELL-NR. ORDER NO.	Verpackung PACKAGING	REV.	KODIERUNG CODING	POS.	STK. QTY.	BENENNUNG DESCRIPTION	MATERIAL MATERIAL	OBERFLAECHE / LOETBEREICH SURFACE / SOLDERING AREA / FARBE/COLOUR	Passend zu: SUITABLE FOR: Abdeckkappe COVER	dazu gehoert: USED WITH: Buchsengehaeuse SOCKET HSG	dazu gehoert: USED WITH: Deckel Lever	Ansicht VIEW
3-2282279-2	13	A	B	3	16	CONTACT PIN	CuSn6	3-5 µm Sn over 1-3 µm Ni IN SOLDERRING AREA	2-967348-1	0-965612-1	0-965343-1	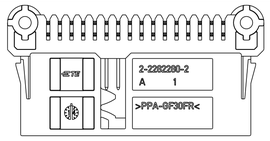
				2	16	CONTACT PIN	CuSn6	3-5 µm Sn over 1-3 µm Ni IN SOLDERRING AREA				
2-2282279-2	5			1	1	PIN HOUSING	PPA-GF30 FR FLAMMABILITY: V0 DSM - Stanyl For Tii - T11	Natur / NATURE				
1-2282279-2	13	B	B	3	16	CONTACT PIN	CuSn6	3-5 µm Sn over 1-3 µm Ni IN SOLDERRING AREA	2-967348-1	0-965612-1	0-965343-1	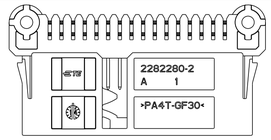
				2	16	CONTACT PIN	CuSn6	3-5 µm Sn over 1-3 µm Ni IN SOLDERRING AREA				
0-2282279-2	5			1	1	PIN HOUSING	PA4T-GF30 FLAMMABILITY: HB DSM - Stanyl For Tii - JTX2	Natur / NATURE				

THIS DRAWING IS A CONTROLLED DOCUMENT.

DIMENSIONS: mm

TOLERANCES UNLESS OTHERWISE SPECIFIED:
0 PLC ±
1 PLC ±
2 PLC ±
3 PLC ±
4 PLC ±
ANGLES ±1°

MATERIAL - -
FINISH - -

DWN D.Wagner 16JAN2019
CHK M.Menzel 16JAN2019
APVD B.Fieberling 16JAN2019
PRODUCT SPEC -
APPLICATION SPEC -
WEIGHT -

TE Connectivity

NAME 32POS.MODU II.HEADER ASSY REFLOW VERSION

SIZE A1 | CAGE CODE - | DRAWING NO C-2282279 | RESTRICTED TO

CUSTOMER DRAWING | SCALE 2:1 | SHEET 1 OF 1 | REV. B2

4805 (3/13)