THIS DRAWING IS UNCONTROLLED
VERTRAULICH UNKONTROLLIERTE ZEICHNUNG
© COPYRIGHT 2012 Tyco Electronics AMP GmbH
RELEASED FOR PUBLICATION - 2012
FREIGABE VERÖFFENTLICHUNG
ALL RIGHTS RESERVED
ALLE RECHTE VORBEHALTEN
CREATED WITH PADENG ZU

LOC	DIST
A1	-

PROJECT NO: PRJ-11-000002372

REVISIONS
ÄNDERUNGEN

F	LTR	DESCRIPTION BESCHREIBUNG	DATE	DWN	APVD
	A	NEW DRAWING	17JAN2012	DR	WD

"THT" HEADER ASSEMBLY VARIANT

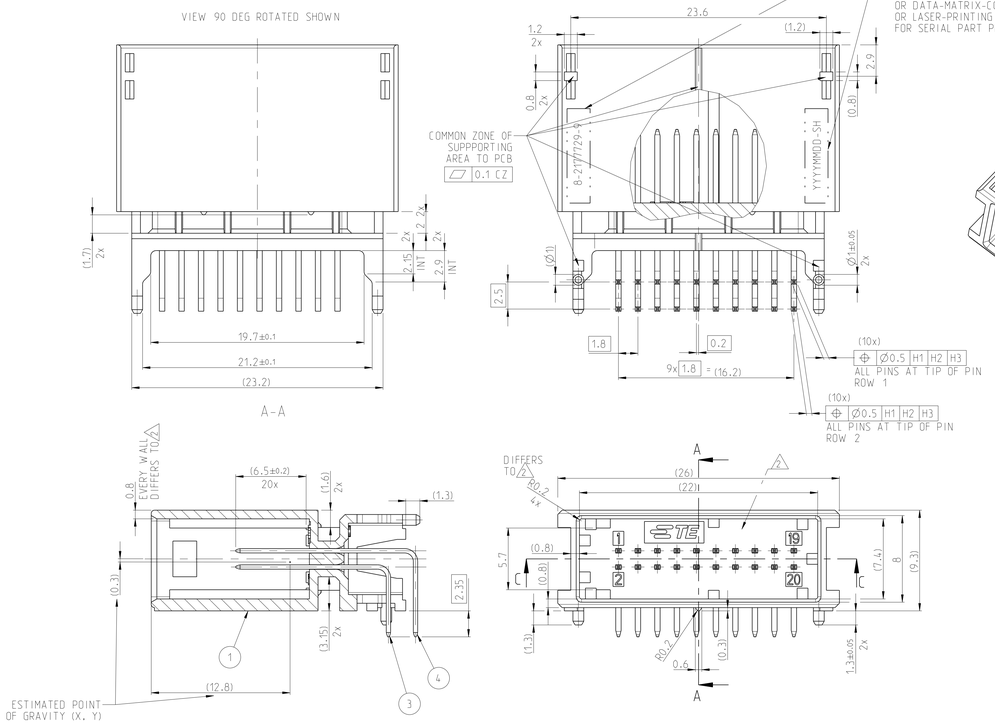

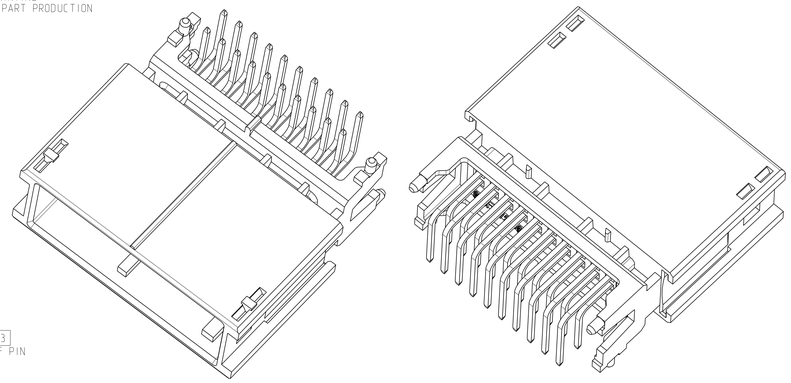

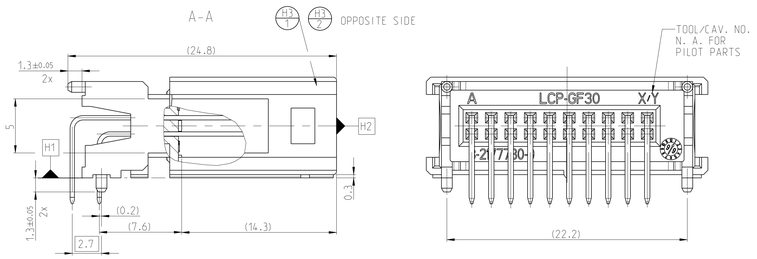

ONLY AVAILABLE FOR PILOT PARTS PRODUCTION

THOSE AS SHOWN ARE HEADER VARIANTS OF NANO-MQS MARKET SERIES HEADERS

FOR COMPLETE
- DESIGN
- DIMENSIONS,
- DATUMS AND TOLERANCING,
- INSPECTIONS AND TESTS
- PERFORMANCE
- MARKINGS

SEE MASTER DOCS OF MARKET HEADER
- CUSTOMER DRAWING 114-94160 REV. A
- PRODUCT SPEC 108-94313 REV. A

1 SUITABLE TO SOCKET HOUSING PN 0-2141404-1 REV.A
Passend zu Buchsengehaeuse PN 0-2141404-1 Rev.A

⚠ BASED ON INTERFACE 114-94000-11 REV. A CODE Z
basierend auf Schnittstelle 114-94000-11 Rev. A Kodierung Z

3 CONTACT PINS 0.4x0.5mm ACC. 114-94000-2 REV. A
Kontaktstifte 0.4x0.5mm gem. 114-94000-2 Rev. A

4 APPLIED TERMINAL SYSTEM: NANO MQS ACC. PRODUCT SPEC. 108-94099 REV. A
Kontaktsystem: Nano-MQS gem. Produktspezif. 108-94099 Rev. A

5 DATUMS "H1, H2, H3" FOR MEASURING SOLDER SIDE (THT) ACC. MASTER DRW
Bezuege "H1, H2, H3" zum Messen loetseitig (THT) gem. Masterzeichnung

6 DATUMS "I1, I2, I3" FOR MEASURING MATING SIDE ACC. MASTER DRW
Bezuege "I1, I2, I3" zum Messen steckseitig gem. Masterzeichnung

I1 -> C
I2 -> A
I3 -> B
"A, B, C" ACC. TO INTERFACE DRW OF NOTE 2

"SMD" HEADER ASSEMBLY VARIANT

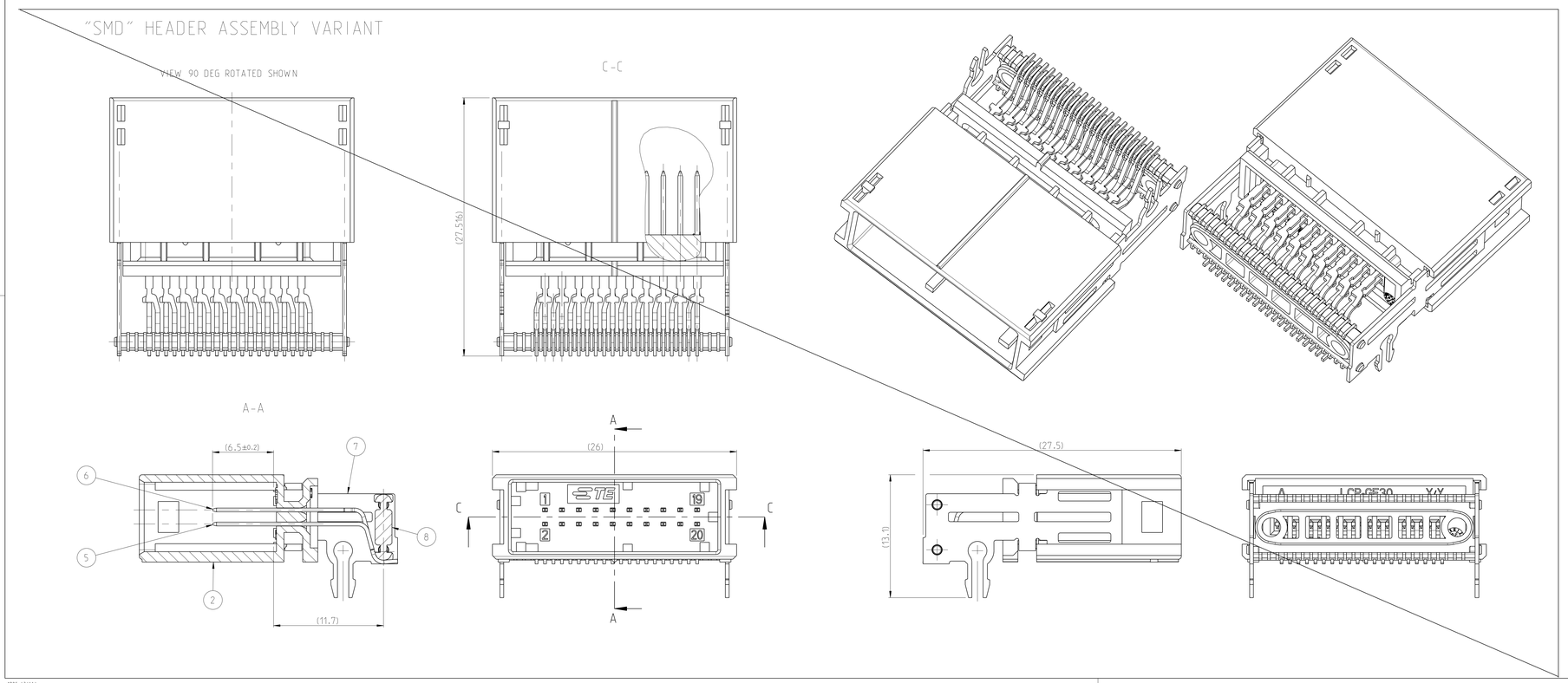

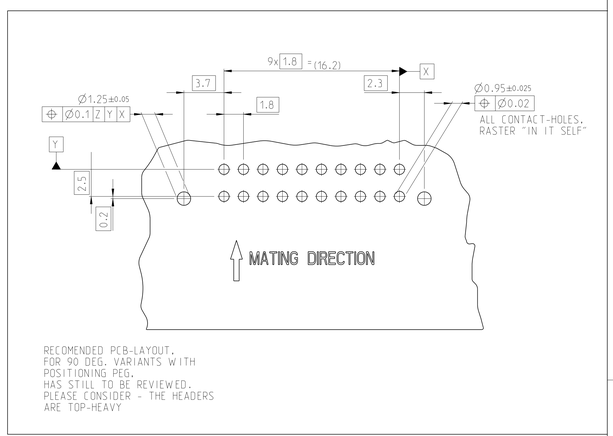

QTY REQD PER ASSY	PART NO	REV	CODE	DESCRIPTION	LENGTH (mm)	FINISH/ COLOUR	MATERIAL	ITEM NO
	PRJ-11-2372-0200-01	A	–	HOLDDOWN BAR	–	BLACK	LCP-GF30	8
	PRJ-11-2372-0050-01	A	–	SUBSHEET SMD	–	Sn ov. Ni	CuSn6	7
10	PRJ-11-2372-0040-01	A	–	NANO MQS CONTACT TAB SMD	23.1	Sn ov. Ni	CuSn6	6
10	PRJ-11-2372-0030-01	A	–	NANO MQS CONTACT TAB SMD	22.3	Sn ov. Ni	CuSn6	5
10	0-2177008-5	A	–	NANO MQS CONTACT PIN	24.0	Sn ov. Ni	CuMg0.1	4
10	0-2177008-4	A	–	NANO MQS CONTACT PIN	20.0	Sn ov. Ni	CuMg0.1	3
1	7-2177730-9	A	Z	HOUSING THT	–	BLACK	LCP-GF30	2
1	8-2177730-9	A	Z	HOUSING THT	–	BLACK	LCP-GF30	1
A	A	REVISION OF EACH ASSY NO (WHEN BLANK, USE DWG REVISION)						

PARTS LIST

DIESE ZEICHNUNG IST EIN KONTROLLIERTES DOKUMENT.
BEMASSUNGEN UND TOLERANZEN GEMAESS GPS (ISO STANDARDS).
THIS DRAWING IS A CONTROLLED DOCUMENT.
DIMENSIONING AND TOLERANCING PER GPS (ISO STANDARDS).

TOLERANCING ISO 8015
TOLERIERUNG ISO 8015

DRW D. Rosan 17JAN2012
CHK W. Dietrich 20JAN2012
APVD D. Frank 23JAN2012

DIMENSIONS: MASSEINHEITEN mm

TOLERANCES UNLESS OTHERWISE SPECIFIED: ALLGEMEINTOLERANZEN DIN 2768 mK
1 PLC ±
2 PLC ±
3 PLC ±
4 PLC ±
ANGLES: UNLESS ±0°
FINISH: OBERFLAECHE: FARBE

PRODUCT SPEC SEE NOTES
APPLICATION SPEC (ANWENDUNGSSPEC)

MATERIAL SEE TABLE

WEIGHT (GEWICHT) ca. 2.9g

CUSTOMER DRAWING (KUNDENZEICHNUNG)

TE Connectivity

NAME 20 POS HEADER ASSY
NANO-MQS HEADER MARKET SERIES

SIZE A0 | CAGE CODE 00779 | DRAWING NO (DZ-NUMMER) C-2177729 | RESTRICTED TO NUR FUER –

SCALE (MASSSTAB): 5:1 | SHEET (BLATT) 1 OF (VON) 1 | REV A

TOLERANCES UNLESS OTHERWISE SPECIFIED ACC. TO DIN 16901-SD
CENTRIC TO NOMINAL DIMENSION. EDITION 1982-11 SHALL APPLY.