© 2023 TE Connectivity. All Rights Reserved.

REVISIONS					
P	LTR	DESCRIPTION	DATE	DWN	APVD
	E2	REVISED AS PER	10SEP2024	MK	GC

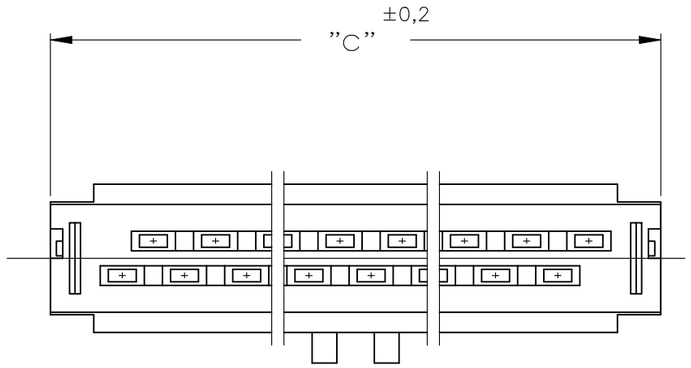

NOTES:

1. CONNECTOR IS DESIGNED FOR FLAT RIBBON CABLE ON 1,27 CENTERS . FOR CABLE REQUIREMENTS SEE AMP APPLICATION SPECIFICATION 114–19022.
2. THESE RECEPTACLE CONNECTORS MATE WITH 0,64 ±0,05 mm SQUARE OR ROUND POSTS ON 2,54mm GRID.
3. MARK INDICATING FIRST CABLE POSITION REFERRING TO CONTACT POSITION.
4. THERE IS NO POLARIZATION–SLOT AT THIS END IN 4, 6, 8, 10 AND 14 POS CONNECTORS.
5. THESE CONNECTORS CAN BE USED IN CONJUNCTION WITH STRAIN–RELIEF COVERS OF PARTNR: 100103.
6. THERE IS NO POLARIZATION–SLOT AT THIS END IN 4, 6, AND 8 POS CONNECTORS.
7. PRODUCT SPECIFICATION 108–19033.

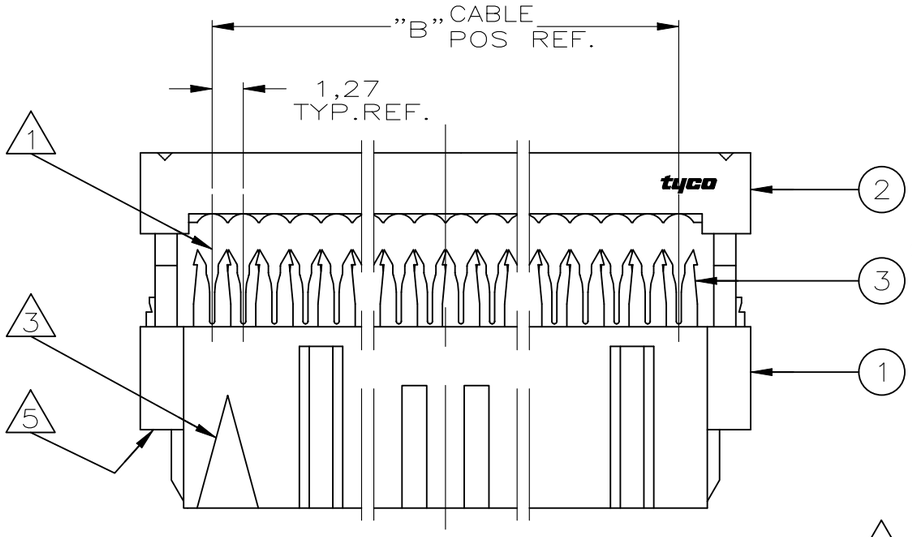

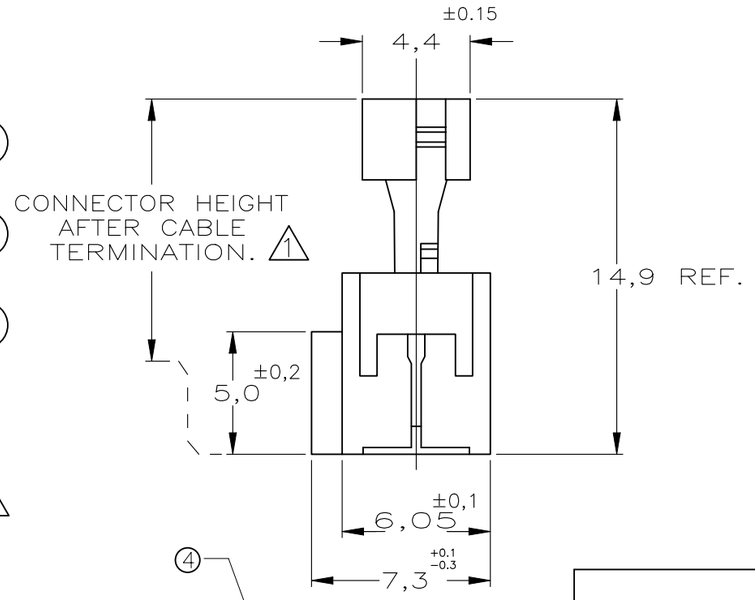

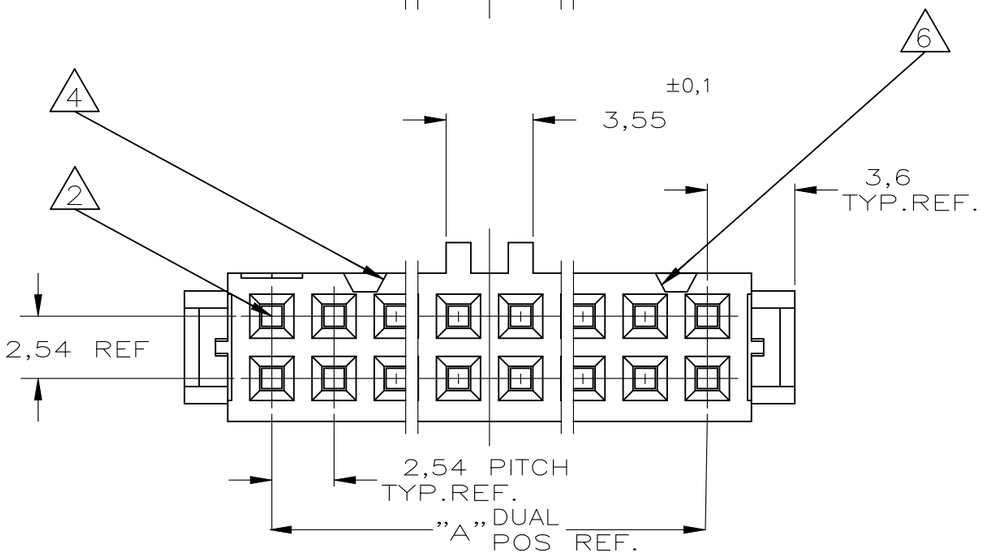

	1000	85,9	64	32	6–215919–4	D
	1000	80,8	60	30	6–215919–0	D
	1000	68,1	50	25	5–215919–0	D
	1500	60,5	44	22	4–215919–4	D
	1500	55,4	40	20	4–215919–0	D
	1500	47,8	34	17	3–215919–4	D
	1500	37,6	26	13	2–215919–6	D
	1500	30,0	20	10	2–215919–0	D
	1500	24,9	16	8	1–215919–6	D
	1500	22,4	14	7	1–215919–4	D
	1500	17,3	10	5	1–215919–0	D
OBSOLETE	~~1500~~	~~14,8~~	~~8~~	~~4~~	~~0–215919–8~~	C
	1500	12,2	6	3	0–215919–6	D
OBSOLETE	~~1500~~	~~9,7~~	~~4~~	~~2~~	~~0–215919–4~~	C
	QUANTITY PER REEL	DIM."C"	"B" CABLE POS.	"A" DUAL POS.	PARTNUMBER 4	PART REV.

3 RECEPTACLE CONTACT	PHOSPHORBRONZE Cu Sn6	AT CONTACT–PLACE:0,2µm Au/PDNi AT WIRING END: 2,5µmTIN ENTIRE UNDERCOATING: 1,27µmNICKEL
2 COVER 1 HOUSING	THERMOPLASTIC POLYESTER GF UL 94 –V0	BLACK BK015 ONLY FOR REF.
COMPONENT NAME	MATERIAL	PLATING / COLOUR

THIS DRAWING IS A CONTROLLED DOCUMENT.

DIMENSIONS: mm

TOLERANCES UNLESS OTHERWISE SPECIFIED:
0 PLC ± –
1 PLC ± –
2 PLC ± –
3 PLC ± –
4 PLC ± –
ANGLES ± –

MATERIAL –

FINISH –

DWN R.HOGEVEEN 02–02–88
CHK R.VERSTIJNEN 03–02–88
APVD L.V.SOEST 03–02–88
PRODUCT SPEC —
APPLICATION SPEC —
WEIGHT —

TE Connectivity

NAME AMP–LATCH MIL–TYPE REC. CONN. ASS'Y 14,9 PRE–ASM

SIZE	CAGE CODE	DRAWING NO	RESTRICTED TO
A3	00779	C–215919	—

CUSTOMER DRAWING

SCALE	SHEET	REV
1:1	1 OF 1	E2