THIS DRAWING IS UNPUBLISHED. RELEASED FOR PUBLICATION 20
© COPYRIGHT 20 BY TYCO ELECTRONICS CORPORATION ALL RIGHTS RESERVED.

REVISIONS					
P	LTR	DESCRIPTION	DATE	DWN	APVD
	A2	ECN-23-206949	06APR2023	SS	PK
	A3	ECN-24-248480	19JAN2024	SS	PK
	A4	ECN-24-249159	24JAN2024	SS	PK
	A5	ECN-24-257301	20MAR2024	SS	PK

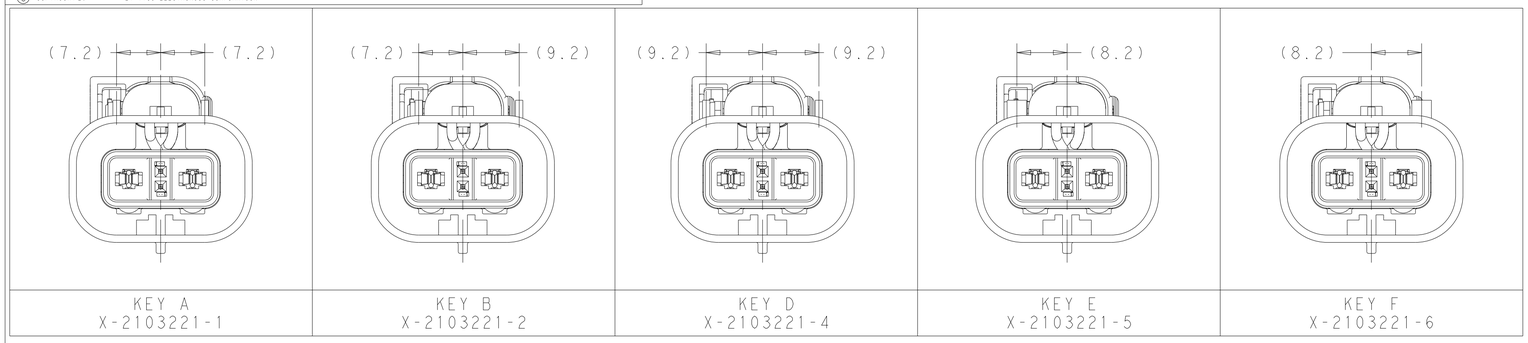

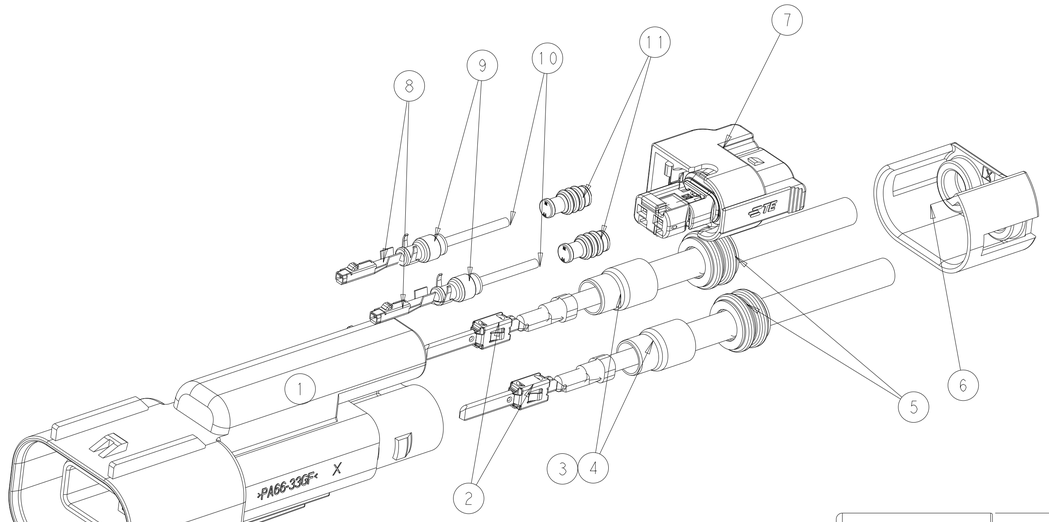

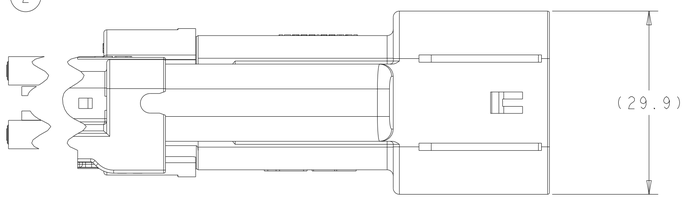

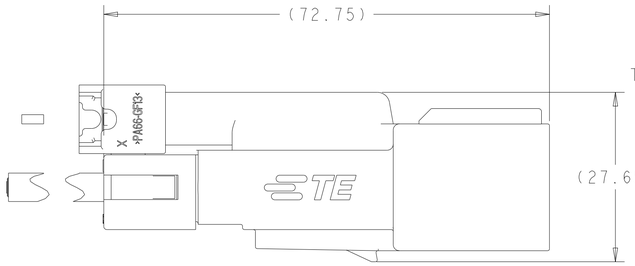

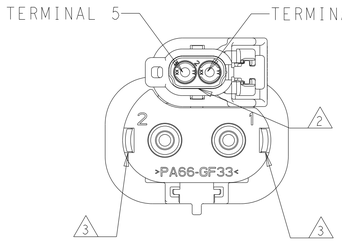

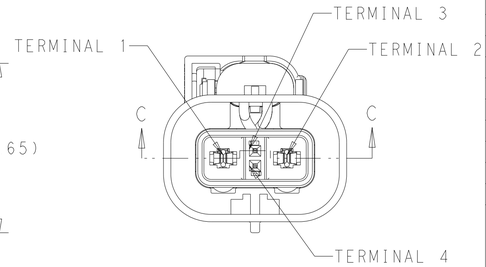

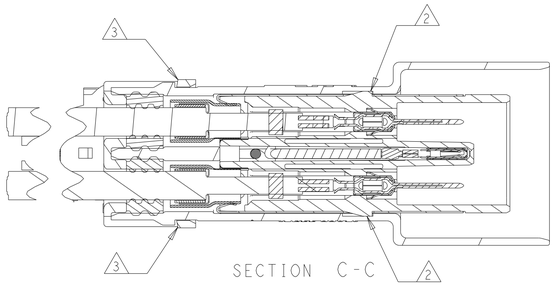

1. ALL TERMINALS MUST BE FULLY SEATED AND LOCKED IN POSITION

2. INNER HOUSING SUB-ASSEMBLY MUST BE FULLY LOCKED AT THIS LOCATION.

3. CABLE SEAL RETAINER MUST BE FULLY LOCKED 2 PLACES

4. PART NUMBERS LISTED ON THIS DRAWING ARE FOR REFERENCE ONLY AND DOCUMENT THE COMPLETE, AS-ASSEMBLED, MALE HARNESS ASSEMBLY (MINUS CABLING). PPAP INFORMATION IS NOT AVAILABLE FOR THESE REFERENCE PART NUMBERS, ITEM LISTED IN THE PAFRT NUMBER TABLE (ITEM 1-6) ARE INDIVIDUAL SALEABLE ITEMS AVAILABLE FROM TE CONNECTIVITY. ITEM-SPECIFIC PPAP INFORMATION MUST BE REQUESTED THROGUH THE ITEM-SPECIFIC PART NUMBERS. PPAP REQUESTS FOR THESE REFERENCE PART NUMBERS WILL BE FULLFILLED WITH A PPAP SUBMISSIONFOR ITEM NO 1 ONLY (SEE P/N TABLE)

5. VALIDATED CABLE/SUBCOMPONENT COMBINATION

6. THIS CABLE HAS NOT BEEN VALIDATED FOR USE WITH THIS CONNECTOR VALIDATION IN CURRENTLY IN PROGRESS CUSTOMER ASSUMES ALL THE RISKS ASSOCIATED WITH USING THIS UN-VALIDATED CABLE/SUB-COMPONENT COMBINATION

2	2	2	2	2	2	2	2	2	2	5-967056-1	MQS CAVITY PLUG	11
										OR		
2		2	2	2	2	2	2	2	2	-	HV WIRE 0.5/ 0.75 SQ.MM) ISO 6722-1	10
2	2	2	2	2	2	2	2	2	2	967067-1	SINGLE WIRE SEAL, MQS	9
2	2	2	2	2	2	2	2	2	2	1670146-3	MCON 1.2 CB RECEPTACLE (0.5 - 0.75 DIA RANGE)	8
2	2	2	2	2	2	2	2	2	2	2098641-1	MCON, 2 POS SEALED, FEMALE, CONN, ASSY	7
1	1	1	1	1	-	-	-	-	-	1587940-2	SEAL RETAINER, CABLE, SIZE B	6
-	-	-	-	-	1	1	1	1	1	1587940-3	SEAL RETAINER, CABLE, SIZE C	
-	-	-	-	-	2	2	2	2	2	1587530-2	SEAL, CABLE, SIZE C-D	5
2	2	2	2	2	-	-	-	-	-	1587530-1	SEAL, CABLE, SIZE C-D	
2	2	2	2	2	-	-	-	-	-	1587829-2	FERRULE, OUTER, SIZE B	4
-	-	-	-	-	2	2	2	2	2	1587829-3	FERRULE, OUTER, SIZE C	
2	2	2	2	2	-	-	-	-	-	1587828-2	FERRULE, INNER, SIZE B	3
-	-	-	-	-	2	2	2	2	2	1587828-3	FERRULE, INNER, SIZE C	
2	2	2	2	2	2	2	2	2	2	2-2141600-2	BLADE TERMINAL, MCP 2.8, 2.5-4.0mm SQ.	2
1	-	-	-	-	1	-	-	-	-	2103191-6	OUTER HOUSING, CAP SUBASSY, KEY F	1
-	1	-	-	-	-	1	-	-	-	2103191-5	OUTER HOUSING SUBASSY, CAP, KEY E	1
-	-	1	-	-	-	-	1	-	-	2103191-4	OUTER HOUSING SUBASSY, CAP, KEY D	1
-	-	-	1	-	-	-	-	1	-	2103191-2	OUTER HOUSING SUBASSY, CAP, KEY B	1
-	-	-	-	1	-	-	-	-	1	2103191-1	OUTER HOUSING SUBASSY, CAP, KEY A	1
-	-	-	-	-	-	-	-	-	-	PART NUMBER	DESCRIPTION	ITEM
F	E	D	B	A	F	E	D	B	A	ASSEMBLY INDEX		
1-2103221-6	1-2103221-5	1-2103221-4	1-2103221-2	1-2103221-1	2103221-6	2103221-5	2103221-4	2103221-2	2103221-1	4 REFERENCE ASSEMBLY NUMBERS		
A5 6 COFICAB H14XCXC04HHH OR CHAMPLAIN 15-08918-XXX					5 HUBER+SUHNER 12582674 ORG 85002132 ORG/BLK					CABLE SUPPLIER/ SPECIFICATION		
4mm2					4mm2					CABLE SIZE		

THIS DRAWING IS A CONTROLLED DOCUMENT.

DIMENSIONS: mm

TOLERANCES UNLESS OTHERWISE SPECIFIED:
0 PLC ±-
1 PLC ±0.5
2 PLC ±0.13
3 PLC ±0.013
4 PLC ±0.0001
ANGLES ±-

MATERIAL - -
FINISH - -

DWN D SIMPSON 03OCT2011
CHK A DE CHAZAL 03OCT2011
APVD -
PRODUCT SPEC 108-32085
APPLICATION SPEC 114-32033
WEIGHT -

TE Connectivity

NAME CAP ASSEMBLY PASS-THROUGH HVIL, HVA280-2PHI REFERENCE DRAWING

SIZE A1 | CAGE CODE 00779 | DRAWING NO C-2103221 | RESTRICTED TO

CUSTOMER DRAWING | SCALE 2:1 | SHEET 1 OF 1 | REV A5

4805 (3/13)