© – TE Connectivity. All Rights Reserved.

REVISIONS					
P	LTR	DESCRIPTION	DATE	DWN	APVD
	E	REVISED PER ECR-25-250800	03JAN2025	F.Z	R.B

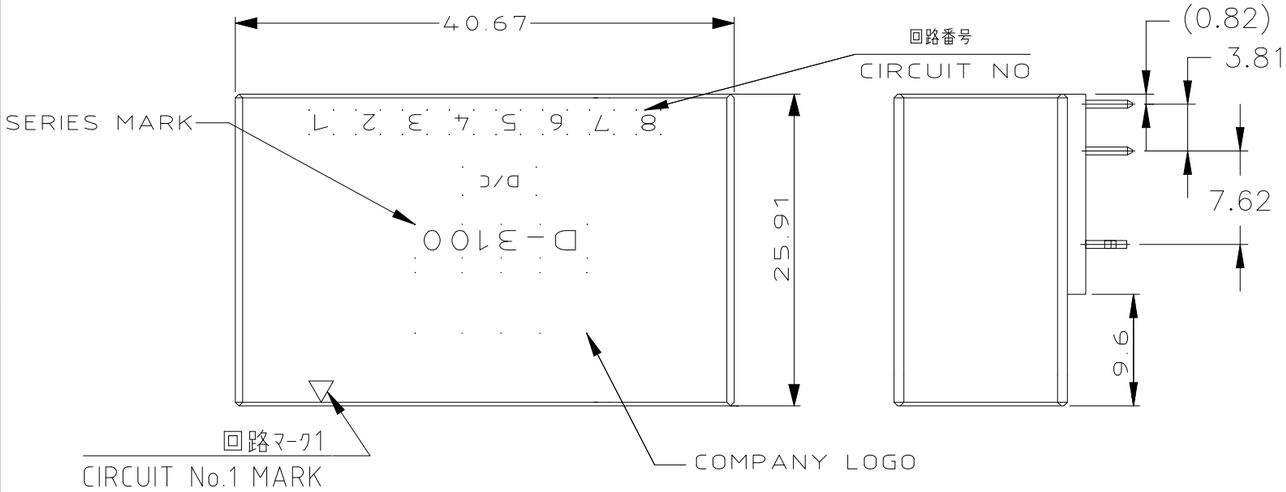

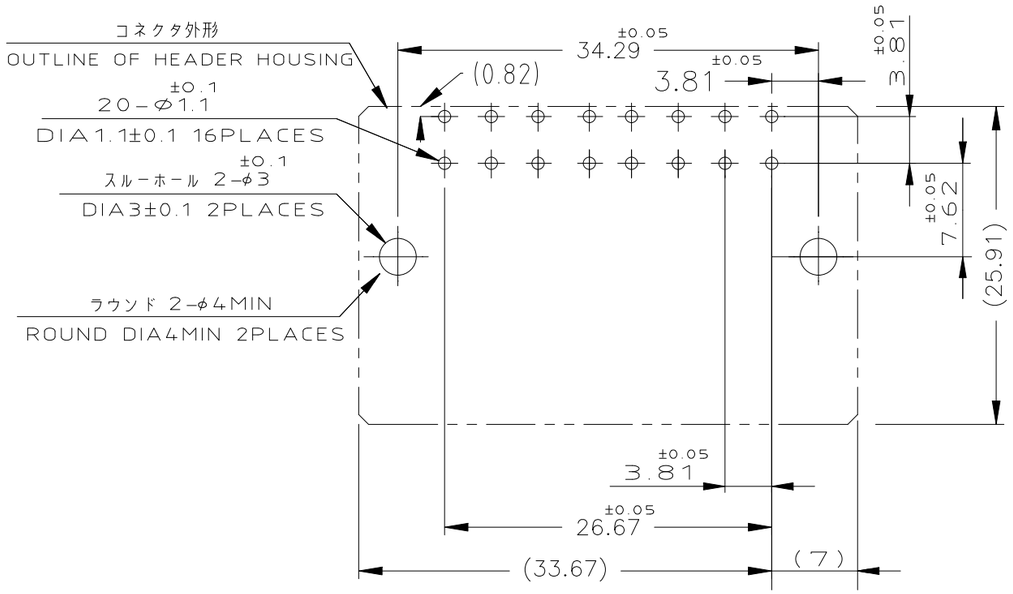

推奨基板取付け穴寸法
PC 基板厚：1.6±0.1
（非累積公差）
（コネクタ搭載面）

RECOMEND PC BOARD HOLE PATTERN
PC BOARD THICKNESS:1.6±0.1
(NOT ACCUMULATE TOLERANCE)
(CONNECTOR MOUNT SIDE)

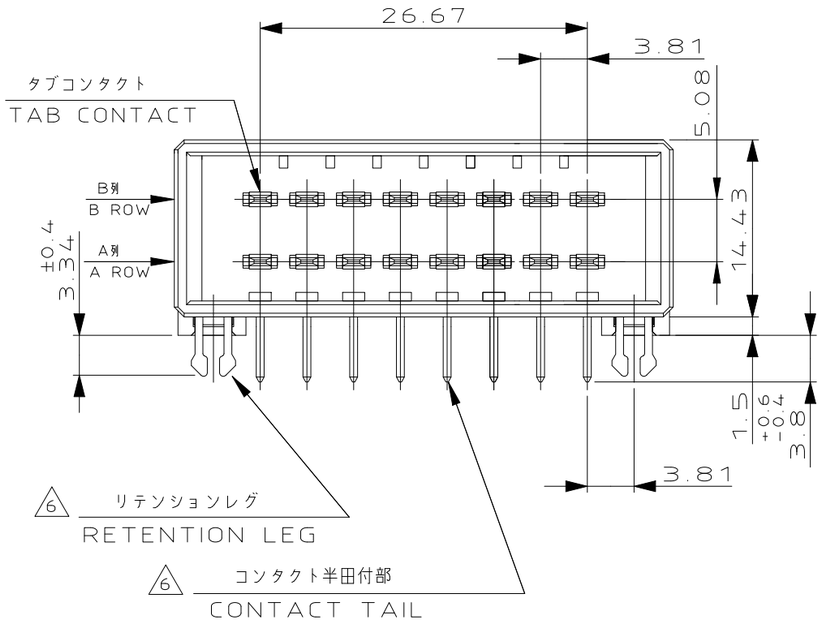

NOTES

1. MATERIAL:HOUSING:GLASS FILED THERMO PLASTIC,POLYESTER COLOR:BLACK
   CONTACT:COPPER ALLOY
   RETENTION LEG:COPPER ALLOY
2. FINISH(CONTACT AREA):0.38μm PdNi & Au PLATING OVER NICKEL
3. FINISH(CONTACT AREA):0.76μm PdNi & Au PLATING OVER NICKEL
4. FINISH(CONTACT AREA):2.0 μmMIN TIN PLATED OVER NICKEL
5. ~~FINISH(RETENTION LEG): TIN-LEAD PLATED (CONTACT TAIL) OVER NICKEL~~
6. FINISH(RETENTION LEG): TIN PLATED (CONTACT TAIL) OVER NICKEL
7. GENERAL TOLERANCE
   10≧ : ±0.3
   30≧ > 10 : ±0.4
   100≧ > 30 : ±0.45
   ANGLE : ±3°

6	2	178307-6
6	4	178307-5
6	3	178307-3
6	2	178307-2
(FINISH)		製品番号 (PART NO.)

THIS DRAWING IS A CONTROLLED DOCUMENT.

DIMENSIONS: mm

TOLERANCES UNLESS OTHERWISE SPECIFIED: 7
0 PLC ±–
1 PLC ±–
2 PLC ±–
3 PLC ±–
4 PLC ±–
ANGLES ±–

MATERIAL: SEE NOTE
FINISH: SEE NOTE

DWN	K.IKEDA	16.MAR.95
CHK	S.Manabe	23.MAR.95
APVD	K.Ikeda	13.MAR.95
PRODUCT SPEC	108-5349	
APPLICATION SPEC	114-5148	
WEIGHT		

TE Connectivity

NAME: 16 POS DOUBLE ROW HORIZONTAL HDR ASSY FOR DYNAMIC 3100

SIZE	CAGE CODE	DRAWING NO	RESTRICTED TO
A3	00779	C-178307	—

CUSTOMER DRAWING | SCALE 2:1 | SHEET 1 OF 1 | REV E