NUMBER 178303

3rd ANGLE PROJECTION

METRIC

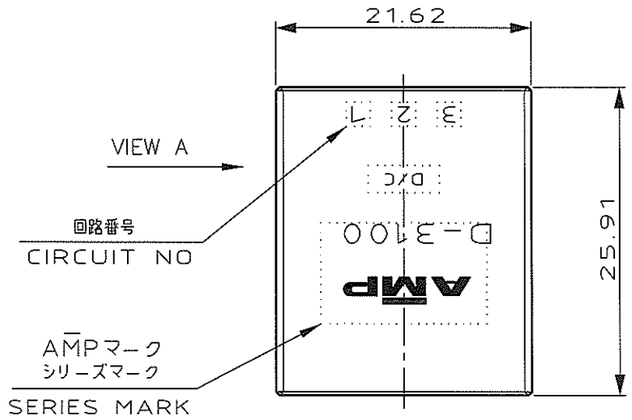

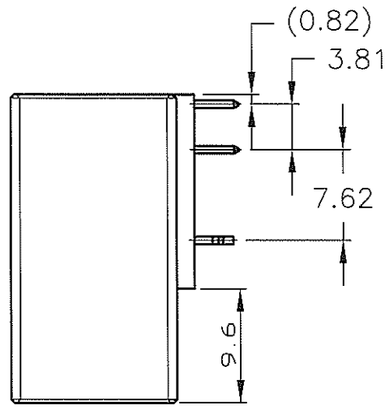

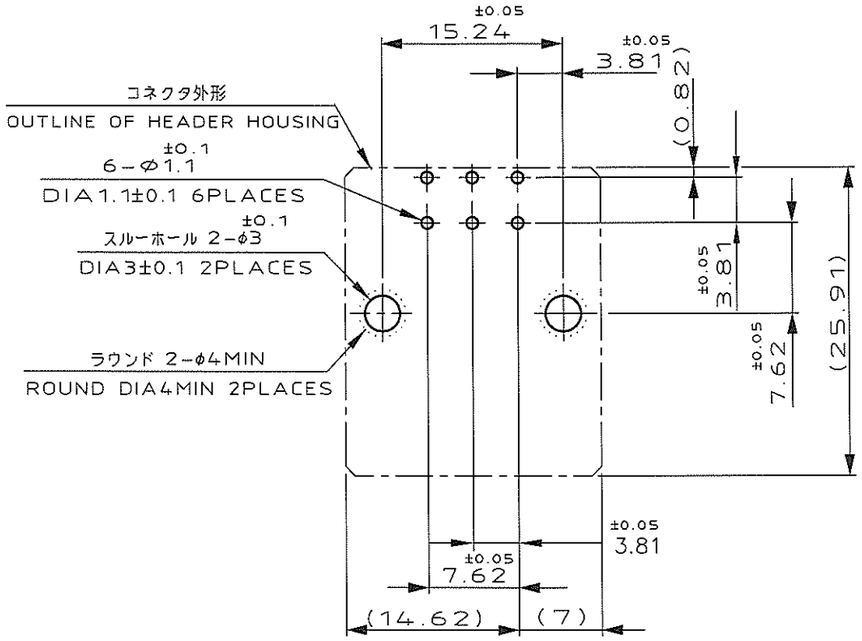

推奨基板取付け穴寸法

PC 基板厚:1.6±0.1
(非累積公差)
(コネクタ搭載面)

RECOMEND PC BOARD HOLE PATTERN
PC BOARD THICKNESS:1.6±0.1
(NOT ACCUMULATE TOLERANCE)
(CONNECTOR MOUNT SIDE)

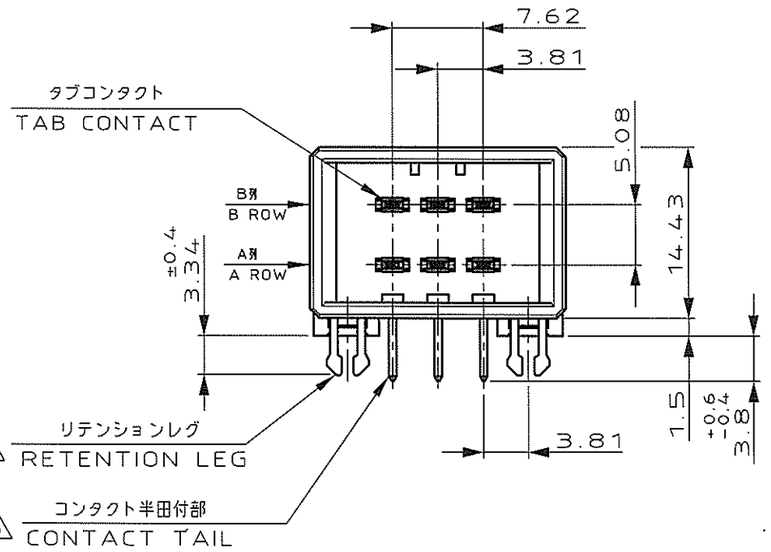

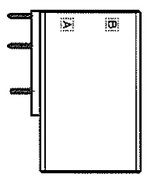

VIEW A
(SCALE:1:1)

NOTES

1. MATERIAL:HOUSING:GLASS FILED THERMO PLASTIC,POLYESTER
CONTACT:COPPER ALLOY
RETENTION LEG:COPPER ALLOY

2. FINISH(CONTACT AREA): 0.38μm PdNi & Au PLATING OVER NICKEL

3. FINISH(CONTACT AREA): 0.76μm PdNi & Au PLATING OVER NICKEL

4. FINISH(CONTACT AREA):2.0 μmMIN TIN PLATED OVER NICKEL

~~5. FINISH(RETENTION LEG): TIN-LEAD PLATED (CONTACT TAIL) OVER NICKEL~~

6. FINISH(RETENTION LEG): TIN PLATED (CONTACT TAIL) OVER NICKEL

6	4	178303-5		
6	3	178303-3		
6	2	178303-2		
(FINISH)		製品番号 (PART NO.)		

LTR	REVISION RECORD	DR	CHK	DATE
D	REVISED PER ECR-25-250788	F.Z	R.B	16JAN 2025
C1	REVISED ECR-07-013273	T S	DM	13JUL 2007
C	REVISED(FJD0-0039-03)	T S	S.M	6/2 '03
B	REVISED(FJD0-0097-03)	T S	S.M	4/15 '03
A	REVISED (FJ00-2183-95)	K I	S M	3-23 '95
0	RELEASED (J-1184)	NM	H.O / S.M	3-4 '92

Copyright © 1991
AMP(Japan) LTD.
ALL RIGHTS RESERVED.

TE Connectivity

WIRE RANGE	mm²(AWG -)
INSULATION DIA	- mmφ
MATERIAL	SEE NOTE 注記参照
FINISH	SEE NOTE 注記参照
DR.	14 JUN 91 N.Matsubara
DE.	14 JUN 91 N.Matsubara
CHK.	24/FEB/'92 H.Obata
APP.	4/MAR/'92 S.MANABE

NAME ダイナミック D3100 水平タイプ
6 歯 ヘッダーアセンブリー
6 POS DOUBLE ROW
HORIZONTAL HDR ASS'Y FOR DYNAMIC 3100

一般公差 (GENERAL TOLERANCE)
10以下 : ±0.3
10を超え 30以下 : ±0.4
30を超え100以下 : ±0.45
角度 : ±3°

SIZE	LOC	NUMBER
A3	J	C-178303

SCALE	REV.	SHEET
2-1	D	1 OF 1

DIMENSIONS IN MILLIMETERS. DO NOT SCALE PRINT

PRINT DIST

AMP-J
REV.10/'83

(CUSTOMER DRAWING) 顧客用図面