NUMBER 178296

3rd ANGLE PROJECTION

METRIC

DIMENSIONS IN MILLIMETERS. DO NOT SCALE PRINT

PRINT DIST

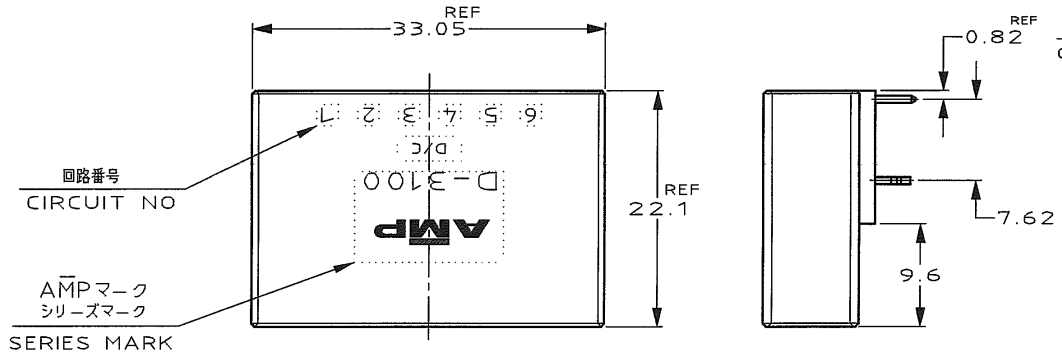

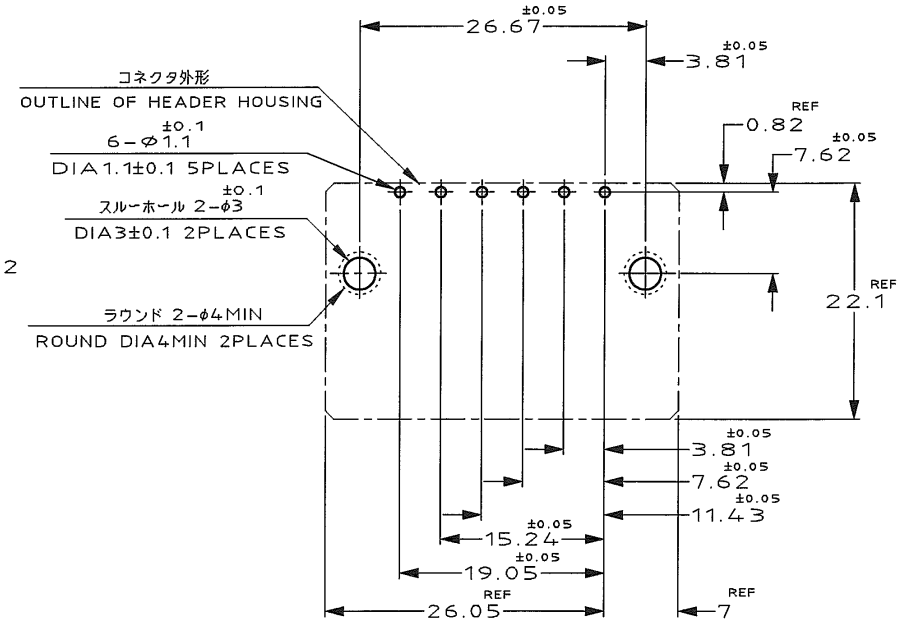

推奨基板取付け穴寸法

PC 基板厚:1.6±0.1
(非累積公差)
(コネクタ搭載面)

RECOMEND PC BOARD HOLE PATTERN

PC BOARD THICKNESS:1.6±0.1
(NOT ACCUMULATE TOLERANCE)
(CONNECTOR MOUNT SIDE)

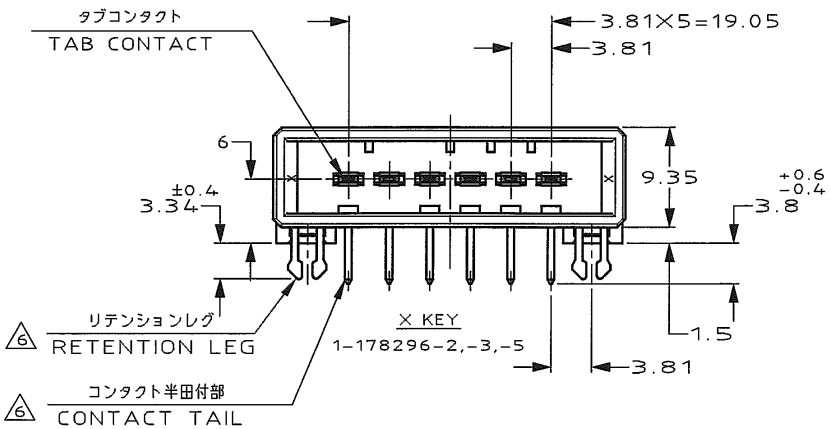

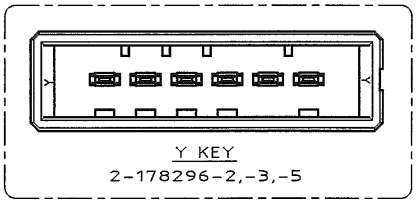

NOTES

1. MATERIAL:HOUSING:GLASS FILED THERMO PLASTIC,POLYESTER(94V-0), COLOR : BLACK
CONTACT:COPPER ALLOY
RETENTION LEG:COPPER ALLOY

2. FINISH(CONTACT AREA): 0.38μm PdNi & Au PLATING OVER NICKEL

3. FINISH(CONTACT AREA): 0.76μm PdNi & Au PLATING OVER NICKEL

4. FINISH(CONTACT AREA):2.0 μmMIN TIN PLATED OVER NICKEL

~~5. FINISH(RETENTION LEG): TIN-LEAD PLATED (CONTACT TAIL) OVER NICKEL~~

6. FINISH(RETENTION LEG): TIN PLATED (CONTACT TAIL) OVER NICKEL

7. OBSOLETE PARTS: OBSOLETE CIS STREAMLINING PER D.RENAUD/D.SINISI

6 4	1,2-178296-5			
6 3	1,2-178296-3	OBSOLETE 7		
6 2	1,2-178296-2			
(FINISH)	製品番号 (PART NO.)			

LTR	REVISION RECORD	DR	CHK	DATE
C	REVISED PER ECR-25-250788	F.Z	R.B	16JAN 2025
B2	REVISED	H.O	N.Y	14NOV 2014
B1	REVISED PER -ECO-10-000444	KK	AEG	JAN10
B	REVISED(FJD0-0039-03)	TS	SM	6/2 '03
A	REVISED(FJD0-0114-03)	TS	SM	25.APR '03
0	RELEASED	KI	SM	1-10 '95

Copyright © 1994
AMP(Japan) LTD.
ALL RIGHTS RESERVED.

TE Connectivity

WIRE RANGE	mm²(AWG -)
INSULATION DIA	- mmφ
MATERIAL	SEE NOTE 注記参照
FINISH	SEE NOTE 注記参照
DR.	22/DEC/'94 K.IKEDA
DE.	22/DEC/'94 K.IKEDA
CHK.	10/JAN/'95 S.MANABE
APP.	10/JAN/'95 S.MANABE

NAME ダイナミック 3100 シリーズ
6 極 ヘッダーアセンブリー (水平タイプ)
6 POS SINGLE ROW
HORIZONTAL HDR ASS'Y FOR DYNAMIC 3100

一般公差 (GENERAL TOLERANCE)
10以下 ±0.3
10を超え 30以下 ±0.4
30を超え100以下 ±0.5
角度 ±3°

SIZE	LOC	NUMBER
B	J	C-178296
SCALE 2-1	REV C	SHEET 1 OF 1

AMP-J
REV.10/'83

(CUSTOMER DRAWING) 顧客用図面