© 2023 TE Connectivity. All Rights Reserved.

PRINT:
5:1

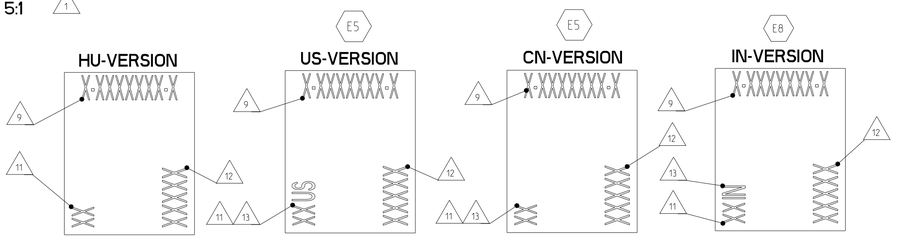

RETAINER IN END POSITION

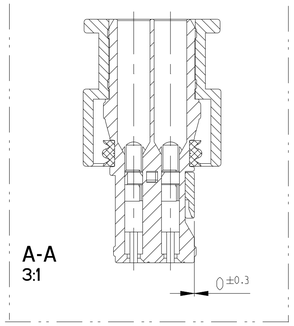

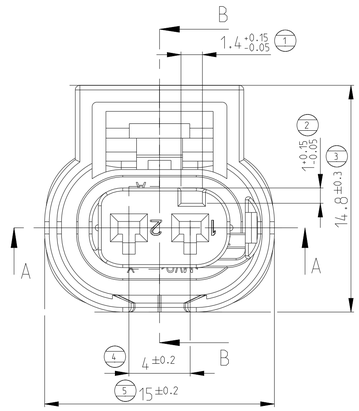

REVISIONS

P	LTR	DESCRIPTION	DATE	DWN	APVD
	E5	LASER PRINT UPDATED. DIMENSION CORRECTED	08JAN2020	SZN	LSZ
	E6	DIMENSION CORRECTED	18MAY2023	SZN	LSZ
	E7	GENERAL DRAWING UPDATE	27NOV2023	SZN	LSZ
	E8	DIVERGENT MARKING ADDED	11MAR2025	SZN	LSZ

CODINGS
M 2:1

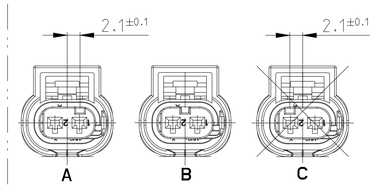

A-A

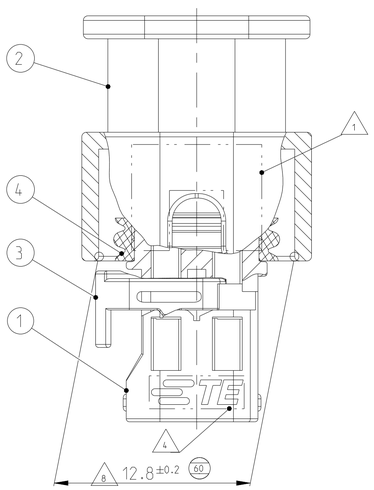

B-B

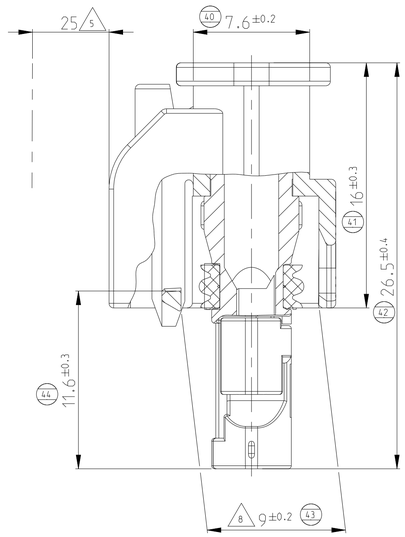

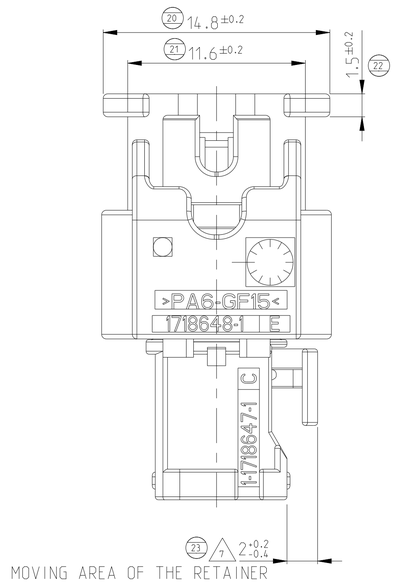

1. AREA FOR PRINT
2. USABLE CONTACTS MCON 1.2 LL
   SEE TE-NO. 1452674. SINGLE WIRE SYSTEM
3. MAX. WIRE SIZE RANGE 1.5 mm² FLR PERMITTED WITH COMPATIBLE SWS
   FOR CAVITY-Ø 3.55MM
   FOR PERMISSIBLE CURRENT CARRYING CAPACITY OF THE SINGLE CONTACT.
   MAX OPERATING TEMPERATURE. VIBRATION RESISTANCE
   SEE PRODUCT SPECIFICATION NO.108-18782
4. SUPPLIER-MARK
5. SPACE OF ACTIVITY
6. -
7. SUPPLY CONDITION: RETAINER IN PRELOCKED POSITION
8. WARPAGE PERMITTED TO MAX. -0.5mm
9. TE ORDER-NO.
10. ACCORDING TO INTERFACE DRAWING
    SEE TE-NO. 114-18679-3
11. ASSEMBLY LINE SEGMENT IDENTIFICATION
12. DATE CODE (DDDYY)
13. DIVERGENT MARKING FOR PARTS PRODUCED IN DIFFERENT REGIONS

3D VIEW

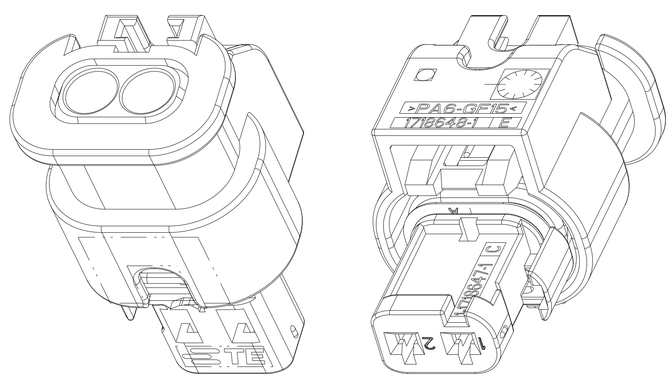

DIVERGENT MARKING IS ALLOWED FOR PARTS FROM DIFFERENT TOOLS
3:1

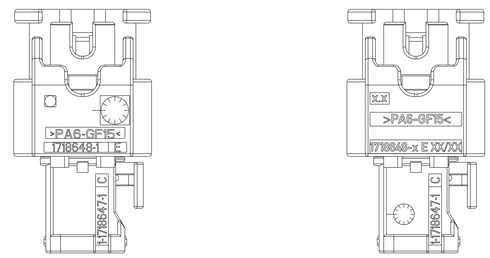

TE-ORDER-NO. 9	COD	DESCRIPTION	REV	QTY	DESCRIPTION	MATERIAL	SURFACE/COLOUR	ITEM
3-1670916-1	C	2pos. MCON 1.2 - LL Connector Sealed	A	1	2pos. MCON 1.2 - Seal	MVQ	NATURE	4
				1	2pos. MCON 1.2 - Retainer	PA66-GF15	VIOLETT	3
				1	2pos. MCON 1.2 - Protec. Cover	PA6-GF15	BLACK	2
				1	2pos. MCON 1.2 - Recepticle Hsg.	PA66-GF30	BLUE	1
2-1670916-1	B	2pos. MCON 1.2 - LL Connector Sealed	E	1	2pos. MCON 1.2 - Seal	MVQ	NATURE	4
				1	2pos. MCON 1.2 - Retainer	PA66-GF15	VIOLETT	3
				1	2pos. MCON 1.2 - Protec. Cover	PA6-GF15	BLACK	2
				1	2pos. MCON 1.2 - Recepticle Hsg.	PA66-GF30	NATURE	1
1-1670916-1	A	2pos. MCON 1.2 - LL Connector Sealed	E	1	2pos. MCON 1.2 - Seal	MVQ	NATURE	4
				1	2pos. MCON 1.2 - Retainer	PA66-GF15	VIOLETT	3
				1	2pos. MCON 1.2 - Protec. Cover	PA6-GF15	BLACK	2
				1	2pos. MCON 1.2 - Recepticle Hsg.	PA66-GF30	BLACK	1

TOLERANCES UNLESS OTHERWISE SPECIFIED ACC. TO DIN 16901-1400 CENTRIC TO NOMINAL DIMENSION. EDITION 1982-11 SHALL APPLY.
Freimasstoleranzen nach DIN 16901-1400 ZD. Es gilt die Ausgabe 1982-11.

THIS DRAWING IS A CONTROLLED DOCUMENT.

DIMENSIONS: mm

TOLERANCES UNLESS OTHERWISE SPECIFIED.
0 PLC ±.5
1 PLC ±0.5
2 PLC ±0.13
3 PLC ±0.013
4 PLC ±0.0001
ANGLES ±

MATERIAL: TBD
FINISH: -

DWN	R. Bachmann	19DEC2006
CHK	A. Schroebel	-
APVD	J. Woller	-
PRODUCT SPEC	108-18969	
APPLICATION SPEC	114-18861	
WEIGHT	-	

TE Connectivity

NAME: 2pos. MCON 1.2 - LL Connector, Sealed

SIZE	CAGE CODE	DRAWING NO	RESTRICTED TO
A1	00779	C-1670916	-

CUSTOMER DRAWING | SCALE 5:1 | SHEET 1 OF 1 | REV E8

4805 (3/13)