THIS DRAWING IS UNPUBLISHED. RELEASED FOR PUBLICATION – ,– .
© COPYRIGHT – By – ALL RIGHTS RESERVED.

REVISIONS

P	LTR	DESCRIPTION	DATE	DWN	APVD
	AA	REVISED PER ECO–16–017574	08DEC2016	AP	DG

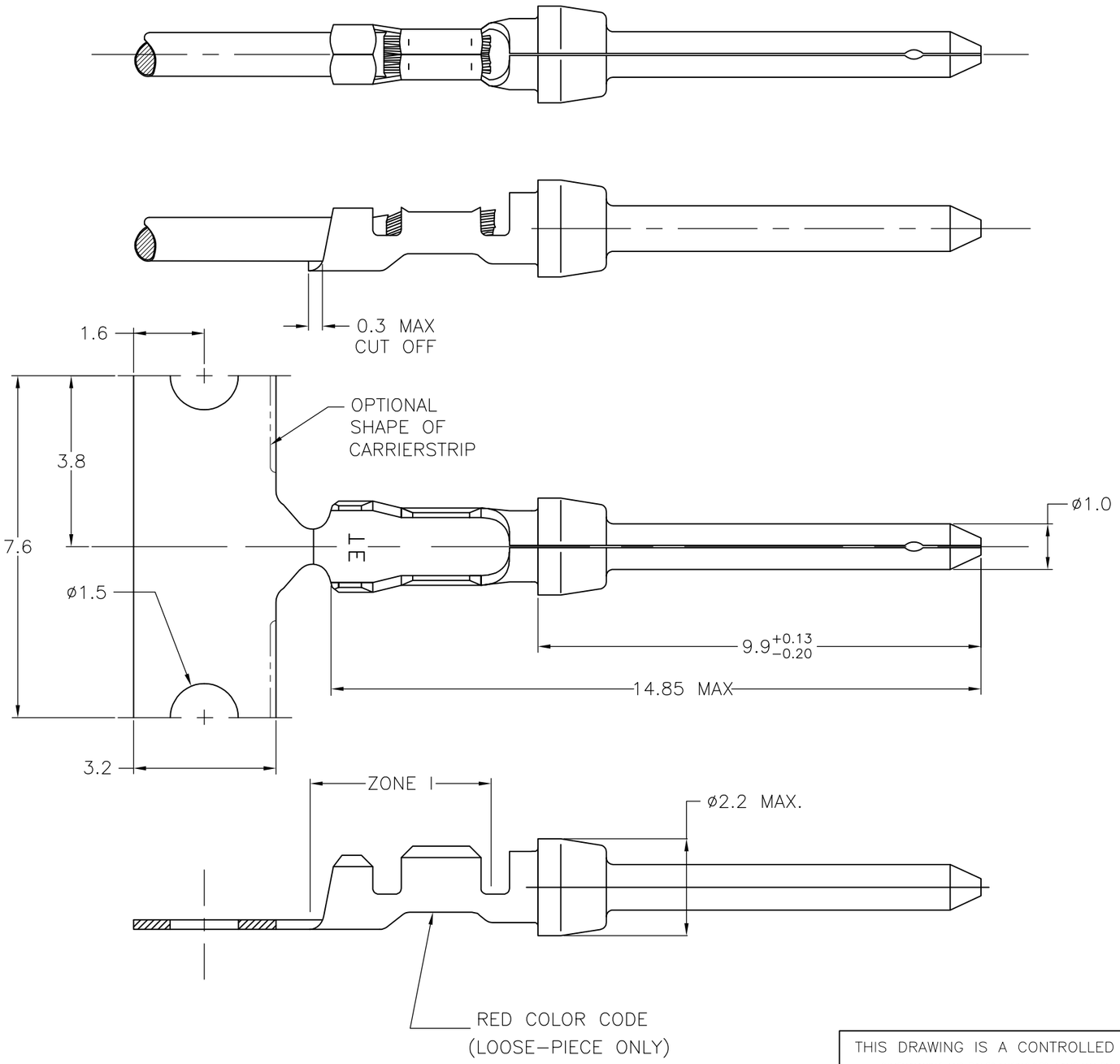

1. FOR MINI–APPLICATOR–12500 PCS REEL.
2. FOR REEL–FEED HAND TOOLING–500 PCS REEL.
3. FOR HAND TOOLING– LOOSE PIECE.
4. MATERIAL: BRASS.
5. FINISH:
   - Ni UNDERPLATING ALL OVER.
   - CONTACT AREA PLATING MEETS IEC–807–3 PERFORMANCE LEVEL 2.
   - CRIMP ZONE Sn PLATED.

WIRE RANGE: 24–20 AWG(0,56–0,20mm²)
INSUL. RANGE: 1,27 – 1,52 DIA.

5	166293–1	5–166053–1	166053–1
FINISH	LOOSE PIECE 3	PART NUMBER 2	PART NUMBER 1

THIS DRAWING IS A CONTROLLED DOCUMENT.
DIMENSIONING AND TOLERANCING PER ASME Y14.5M–2009

DIMENSIONS: mm

TOLERANCES UNLESS OTHERWISE SPECIFIED:
0 PLC ± –
1 PLC ± 0,127
2 PLC ± –
3 PLC ± –
4 PLC ± –
ANGLES ± –

MATERIAL –
FINISH –

DWN –
CHK K. MALCZYK 09SEP08
APVD T. DE BOER 09SEP08
PRODUCT SPEC 108–40005
APPLICATION SPEC 114–10000
WEIGHT 0.000000

TE Connectivity

NAME PIN CONTACT, SIZE 20 DF. –

SIZE	CAGE CODE	DRAWING NO	RESTRICTED TO
A3	00779	C–166053	—

CUSTOMER DRAWING | SCALE NTS | SHEET 1 OF 1 | REV AA