DRAWING MADE IN AMERICAN PROJECTION

NUMBER C-163306

REV	DESCRIPTION	DATE	DWN	APR
B1	REVISED PER ECO-11-005150	28MAR11	RK	HMR
B2	REVISED PER ECN-23-195825	03FEB23	WLS	VS

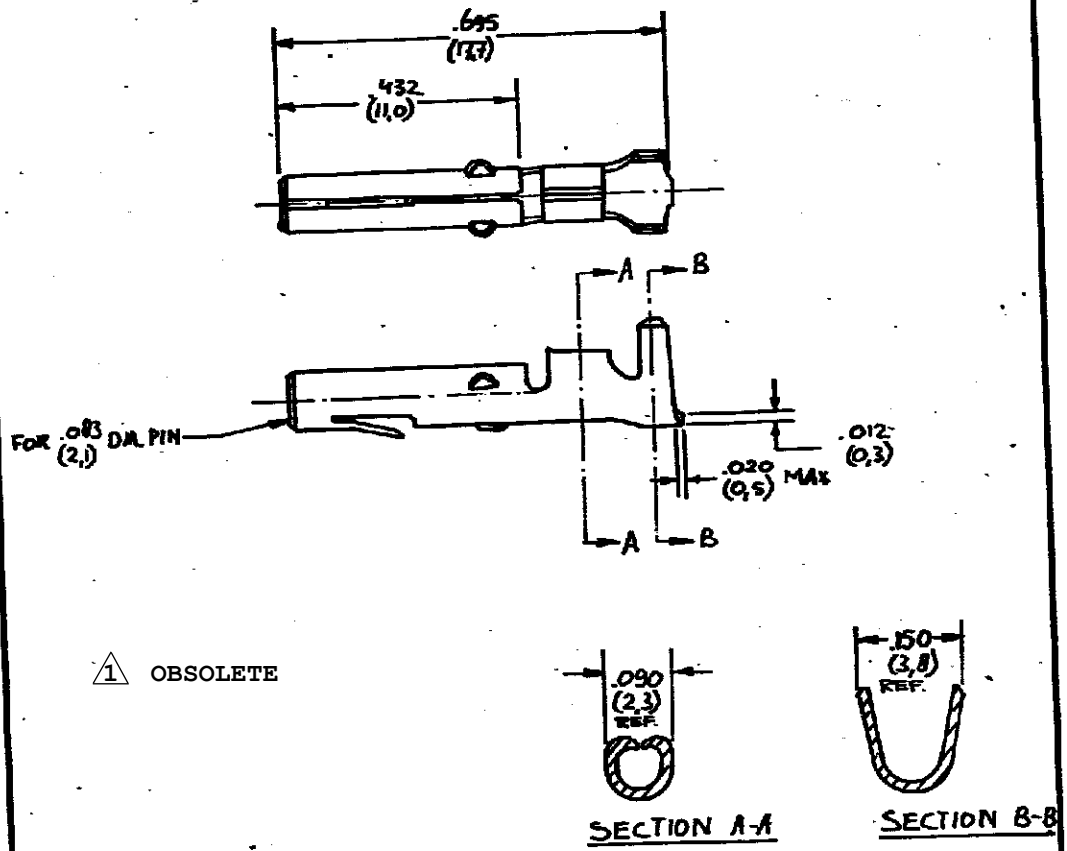

1 OBSOLETE

CUSTOMER COPY FOR REFERENCE ONLY

TE Connectivity

ORDER NO.	MATERIAL	PLATING
163306-4	PHOSPHOR BRONZE	PRE-TIN
163306-3	PHOSPHOR BRONZE	1 NONE
163306-2	BRASS	PRE-TIN
163306-1	BRASS	1 NONE

WIRE RANGE 1.0-2.5 mm² | INSUL. RANGE .115 (2,9) MAX. | FIRST USED

SCALE 4:1 | LOC H | SIZE A | NO C-163306 | REV B2

NAME SOCKET MATE-N-LOK loose piece

DR B.BUNEN 16-9-71 | DATE | DE | DATE

CHK | DATE | APP | DATE 1-09-71

DIMENSIONS IN (M.M.) DO NOT SCALE PRINT

AMP 9252