THIS DRAWING IS UNPUBLISHED. RELEASED FOR PUBLICATION 20
© COPYRIGHT 20 BY TYCO ELECTRONICS CORPORATION, ALL RIGHTS RESERVED.

CAD Pro-E
DO NOT REVISE EXCEPT BY CAD

LOC	DIST
AP	-

REVISIONS

P	LTR	DESCRIPTION	DATE	DWN	APVD
	0	RELEASED	14DEC2005	VF	JAL
	A	REVISED BY ECO-08-002269	31JAN2008	VF	JAL
	B	ECO-08-020033	18SEP2008	GO	WB
	B1	ECO-08-025773	16OCT2008	GO	WB

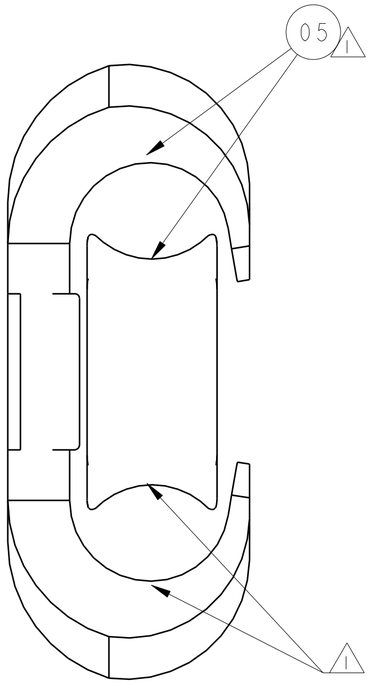

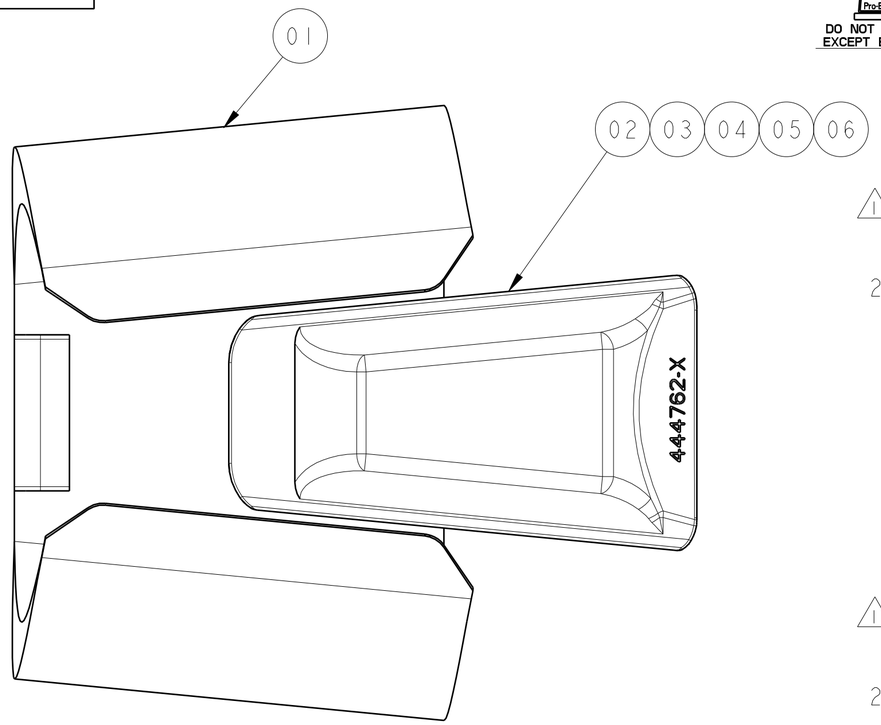

1 - SYNTHETIC INHIBITOR IN BOTH SIDES "C"MEMBER AND WEDGE MEMBER.

2 - APPLICABLE CABLE RANGE:

SUM OF DIA.		RUN WIRE		TAP WIRE		PART NUMBER
MAX.	MIN.	MAX.	MIN.	MAX.	MIN.	
37,00	32,50	18,50	16,30	18,50	15,00	1599784-1
33,10	29,00	18,50	16,30	14,60	12,70	1599784-2
29,30	25,80	18,50	16,30	10,80	9,50	1599784-3
28,46	25,76	18,50	16,30	10,11	7,41	1599784-4
25,30	22,42	18,50	16,30	6,95	4,11	1599784-5

1 - INIBIDOR SINTÉTICO EM AMBOS OS LADOS DO COMPONENTE "C" E DO COMPONENTE CUNHA.

2 - FAIXA APLICÁVEL DE CABOS:

SOMA DOS DIÂMETROS		CONDUTOR PRINCIPAL		CONDUTOR DERIVAÇÃO		PART NUMBER
MAX.	MIN.	MAX.	MIN.	MAX.	MIN.	
37,00	32,50	18,50	16,30	18,50	15,00	1599784-1
33,10	29,00	18,50	16,30	14,60	12,70	1599784-2
29,30	25,80	18,50	16,30	10,80	9,50	1599784-3
28,46	25,76	18,50	16,30	10,11	7,41	1599784-4
25,30	22,42	18,50	16,30	6,95	4,11	1599784-5

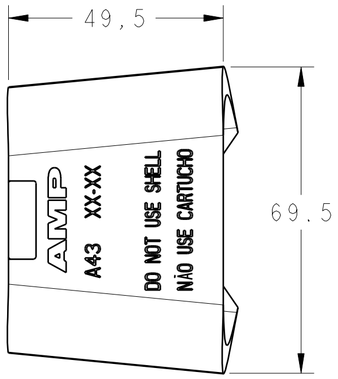

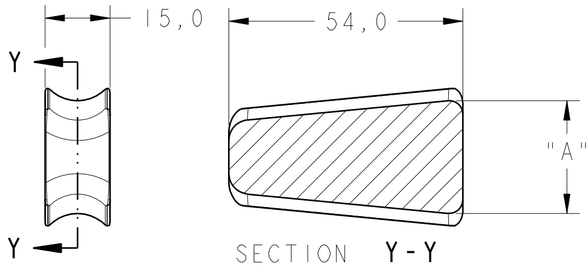

ENGRAVING

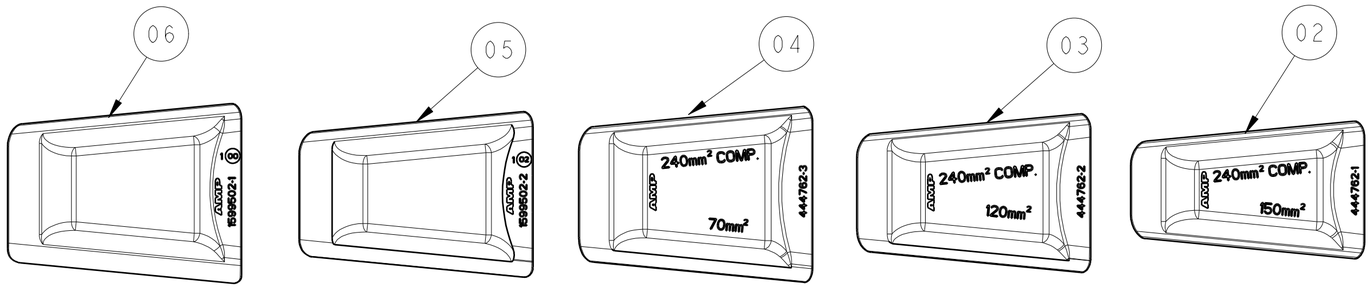

PN 1599784-5 PN 1599784-4 PN 1599784-3 PN 1599784-2 PN 1599784-1

1599784					ITEM	"A"	MATERIAL	DESCRIPTION
-5	-4	-3	-2	-1				
1	1	1	1	1	1	—	ALUMINUM ALLOY	"C"MEMBER
-	-	-	-	1	2	26.9	ALUMINUM ALLOY	WEDGE MEMBER
-	-	-	1	-	3	30.6	ALUMINUM ALLOY	WEDGE MEMBER
-	-	1	-	-	4	33.7	ALUMINUM ALLOY	WEDGE MEMBER
-	1	-	-	-	5	32.9	ALUMINUM ALLOY	WEDGE MEMBER
1	-	-	-	-	6	37.1	ALUMINUM ALLOY	WEDGE MEMBER

REQ. PER ASS'Y

THIS DRAWING IS A CONTROLLED DOCUMENT FOR TYCO ELECTRONICS CORPORATION IT IS SUBJECT TO CHANGE AND THE CONTROLLING ENGINEERING ORGANIZATION SHOULD BE CONTACTED FOR THE LATEST REVISION.

DIMENSIONS: mm

TOLERANCES UNLESS OTHERWISE SPECIFIED:
0 PLC ±-
1 PLC ±2,0
2 PLC ±-
3 PLC ±-
4 PLC ±-
ANGLES ±-

MATERIAL: SEE TABLE
FINISH: -

DWN V.FUZETTI 14DEC2005
CHK L.O.M.BORELLI 14DEC2005
APVD J.A.LA SALVIA 14DEC2005
PRODUCT SPEC 108-37074-1
APPLICATION SPEC 411-37044-1
WEIGHT -

Tyco Electronics
TYCO ELECTRONICS do Brasil LTDA.
Sao Paulo, Brasil

NAME MEDIUM III ECONECT ASS'Y
-

SIZE	CAGE CODE	DRAWING NO	RESTRICTED TO
A2	00779	C-1599784	-

CUSTOMER DRAWING | SCALE - | SHEET 1 OF 1 | REV B1