NUMBER C. 140663

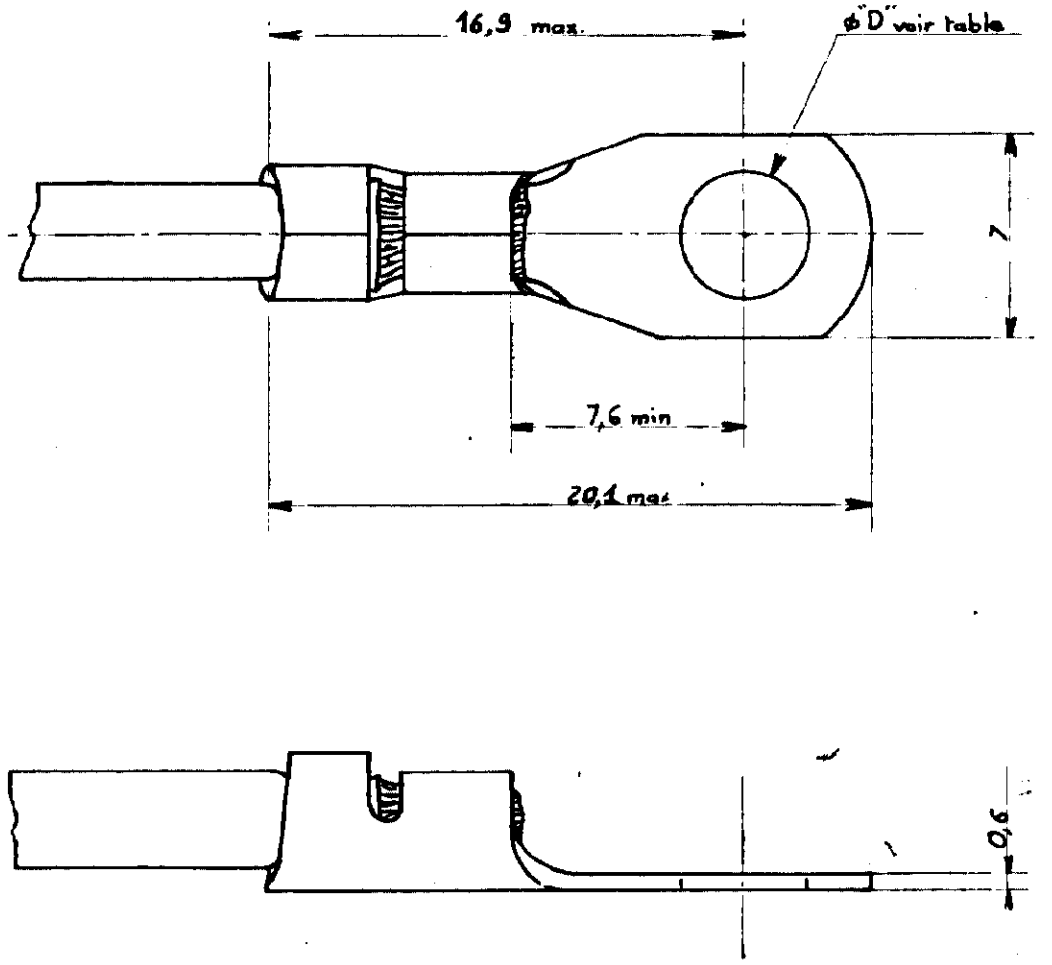

(B)	~~140753~~	~~3,1~~	~~3~~
	140664	4,3	4
	140663	4,3	4
	NUMEROS	"D" ±0,075	BORNE

DO NOT SCALE PRINT

DIMENSIONS IN MM.

LTR	REVISION RECORD	DR	CHK	DATE
B	Inactivé N° 140753	C.C.		15-2 1973
A	Revisé	MD		[illegible]

PRINT DIST B

DR YK 13 VIII 65 | DE

CHK | APP

©1965 BY AMP INCORPORATED ALL RIGHTS RESERVED. AMP PRODUCTS COVERED BY PATENTS AND/OR PATENTS PENDING.

CUSTOMER COPY REFERENCE ONLY

MATERIAL AND FINISH
Laiton
140753 : Brut
140664 : Etamé
140663 : Brut

AMP DE FRANCE S.A. PONTOISE

CLASS

WIRE — RANGE — INSULATION
0,8 à 2 mm² | ϕ 2,8 à 4 mm.

TYPE Automatique

TOLERANCE EXCEPT AS NOTED ± .015 ± 1° 0'

SCALE 4-1

F A NO C.140663 REV B

NAME
COSSE A PLAGE RECTANGULAIRE