THIS DRAWING IS UNPUBLISHED. RELEASED FOR PUBLICATION 20
DIFFUSION DESTREINTE LIBRE A LA DIFFUSION
© COPYRIGHT 20 - ALL RIGHTS RESERVED. TOUS DROITS RESERVES.

DETAIL H
SCALE (ECH.)10:1

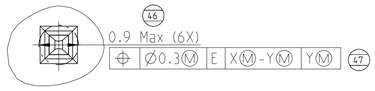

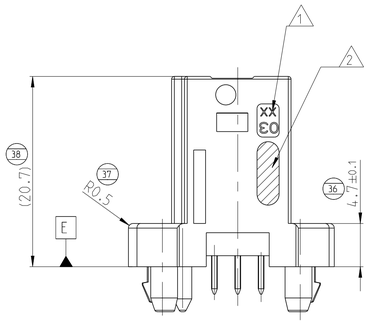

SECTION A-A
(COUPE)

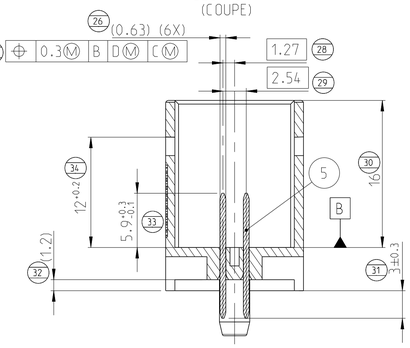

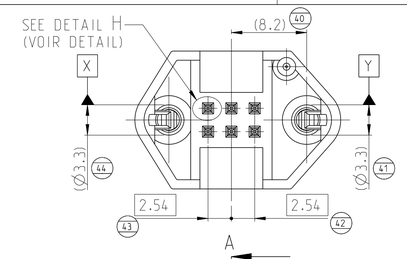

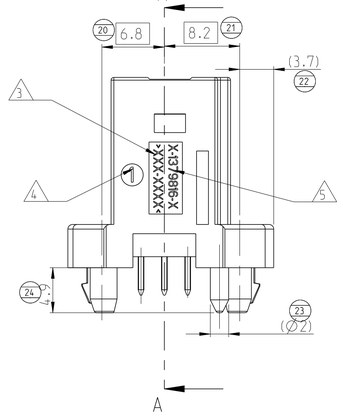

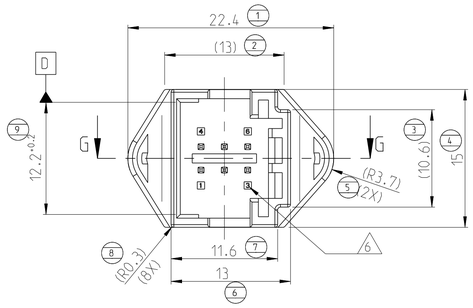

1379816-1

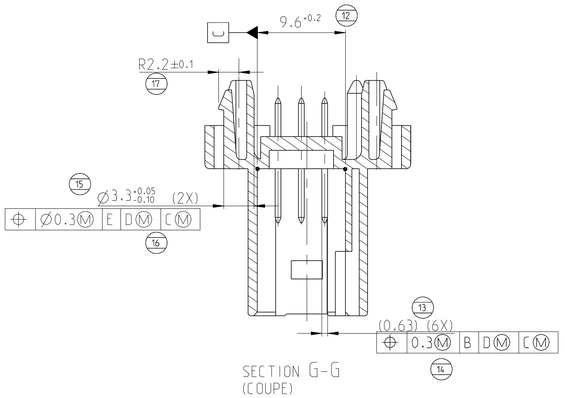

SECTION G-G
(COUPE)

NOTES :

50 1 PRODUCTION DATE OF PLASTIC PART
DATE DE PRODUCTION DU BOITIER PLASTIQUE

51 2 TE LOGO
LOGO DE TE

52 3 MATERIAL REFERENCE : SEE THE TABLE
REFERENCE MATIERE : VOIR TABLEAU

53 4 MOLD CAVITY MARKING
MARQUAGE D'EMPREINTE DU MOULE

54 5 ASSEMBLY TE PART NUMBER
REFERENCE DE TE PRODUIT ASSEMBLE

55 6 CAVITY MARKING
MARQUAGE DES ALVEOLES

7 DIMENSION IN BRACKETS FOR INFORMATION ONLY
COTE ENTRE PARENTHESES POUR INFORMATION UNIQUEMENT

8 INFLAMMABILITE
FLAMABILITY

REVISIONS

P	LTR REV	DESCRIPTION MODIFICATIONS	DATE	DWN DESS.	APVD APP.
	A	NEW DRAWING	18AUG2014	MN	JL
	B	ADDED NEW P/N 2-1379816-4	23JUN2015	NT.N	J.L

B
2-1379816-4

BROWN
(MARRON)

1379816-4
&
1-1379816-4

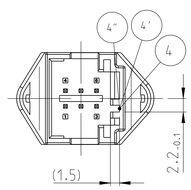

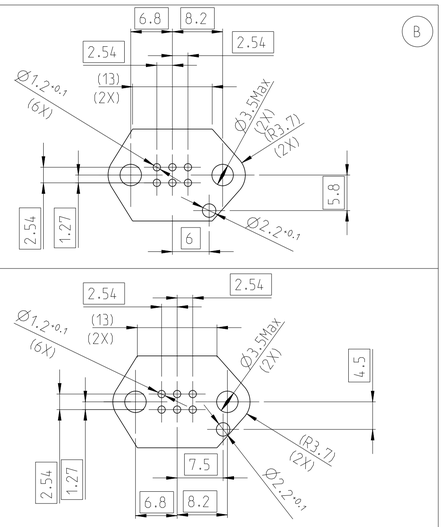

1379816-3
&
1-1379816-3
GREEN
(VERT)

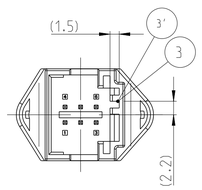

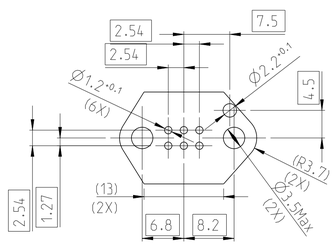

1379816-1
&
1-1379816-1
BLACK
(NOIR)

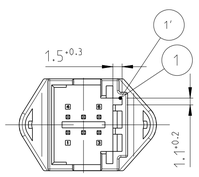

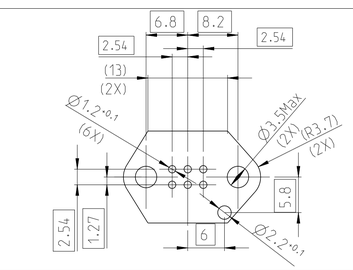

ASS'Y P/N
(REF. ASSEMBLEE)

CODING / SCALE 2:1
(DETROMPAGE / ECH.2:1)

RECOMMENDED PCB LAYOUT
(RECOMMANDATION IMPLANTATION CI)
VIEW FROM TOP / VUE DE DESSUS
PCB THICKNESS / EPAISSEUR CI = 1.6±10%

B

OBSERVATION

MARKING OF MATERIAL REFERENCE ON THE PLASTIC HOUSING
MARQUAGE DE LA REFERENCE MATIERE SUR LE BOITIER PLASTIQUE

> SPS GF20 <			> PCT GF30 FR(17) <	> PCT GF30 <		> PCT GF30 FR(17) <

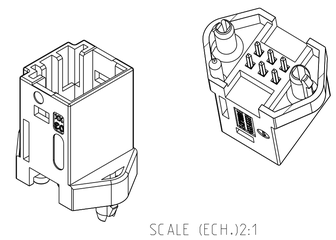

SCALE (ECH.)2:1

ASS'Y P/N REF. ASSEMBLEE	1379816-1	1379816-3	1379816-4	1-1379816-1	1-1379816-3	1-1379816-4	2-1379816-4	FINITION	MATERIAL (MATIERE)	DESIGNATION	ITEM
	6	6	6	6	6	6	6	PRE-TINNED (PRE-ETAME) 2.5 TO 5µm OVER NICKEL (2.5 A 5µm SUR SOUS COUCHE NICKEL)	CuSn6	PIN (BROCHE) MQS 0.63 X 0.63	5
B							1	BROWN (MARRON) 8	PCT GF30 (UL94 V0)	HOUSING 6W MQS (BOITIER 6V MQS)	4''
						1		BROWN (MARRON)	PCT GF30		4'
					1			GREEN (VERT)			3'
				1				BLACK (NOIR) 8	PCT GF30 (UL94 V0)		1'
			1					BROWN (MARRON)	SPS GF20		4
		1						GREEN (VERT)			3
	1							BLACK (NOIR)			1
	QTY (QTE)							FINITION	MATERIAL (MATIERE)	DESIGNATION	ITEM

THIS DRAWING IS A CONTROLLED DOCUMENT.
CE PLAN EST UN DOCUMENT CONTROLE PAR TYCO ELECTRONICS. IL EST SUSCEPTIBLE D'ETRE REVISE. CONTACTER LE SERVICE TECHNIQUE DE TYCO ELECTRONICS POUR OBTENIR LA DERNIERE REVISION.

DIMENSIONS: mm

TOLERANCES UNLESS OTHERWISE SPECIFIED:
TOLERANCES NON SPECIFIEES
(Suivre NB DE DECIMALES)
0-PLCODE: ±
1-PLCODE: ±
2-PLCODE: ±0.3
3-PLCODE: ±
4-PLCODE: ±
ANGLES ±5

MATERIAL/MATIERE: - -
FINISH/FINITION: - -

DWN/DESSINE 18AUG2014 MADHUSUDHAN N
CHK/VERIFIE 18AUG2014 R.CHARLES
APVD/APPROUVE 18AUG2014 J.LALANGE
PRODUCT SPEC SPEC. PRODUIT 108-15329
APPLICATION SPEC SPEC. APPLICATION -
WEIGHT MASSE APPROX. -

TE Connectivity

NAME TITRE: 6W MQS HEADER WITH BOARD-LOCKS
EMBASE 6V MQS AVEC BOARD-LOCKS
-

SIZE FORMAT A1 | CAGE CODE 00779 | DRAWING NO No PLAN C-1379816 | RESTRICTED TO RESERVE A -

Customer Drawing /PLAN CLIENT UNIQUEMENT POUR REFERENCE | SCALE ECHELLE 3:1 | SHEET FEUILLE 1 OF DE 1 | REV B

4805 (3/13)