THIS DRAWING IS UNPUBLISHED. RELEASED FOR PUBLICATION 2005
© COPYRIGHT 2005 Tyco Electronics AMP GmbH ALL RIGHTS RESERVED.

LOC	DIST
A1	-

REVISIONS

P	LTR	DESCRIPTION	DATE	DWN	APVD
	N4	SEE PCN-E-15-007677	19MAY2015	JR	HR
	N5	SEE PCN-E-17-001532	02FEB2017	KC	SH
	N6	SEE PCN-E-18-005619	13APR2018	RS	-
	N7	E-20-009664	10JUL2020	SRN	PT

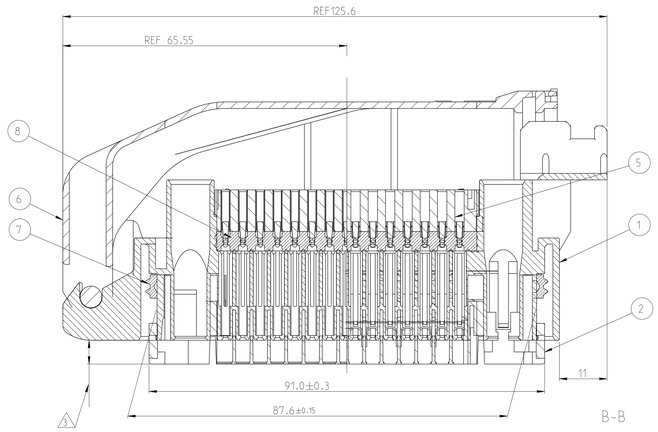

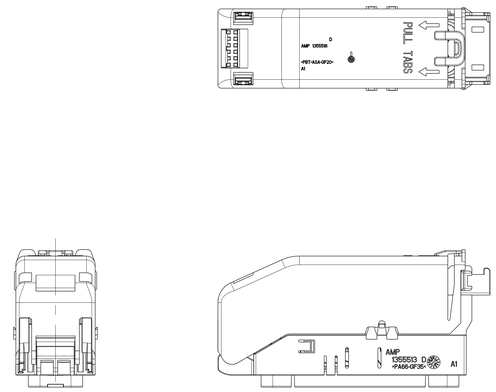

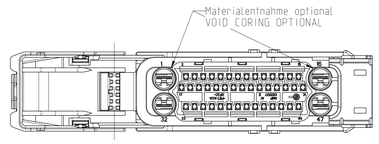

CONNECTOR WITH
OPENED SHIELD

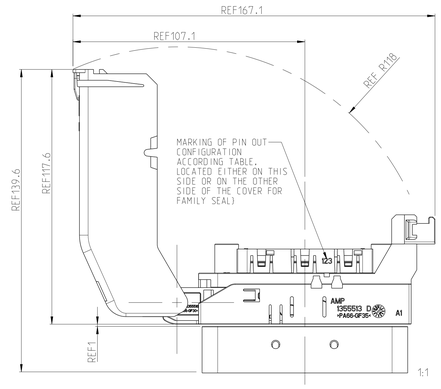

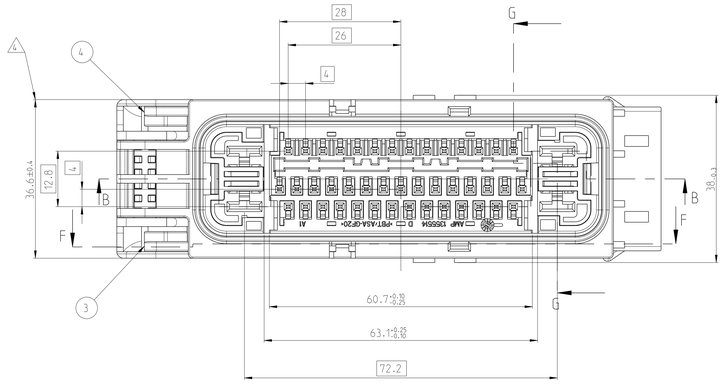

TPA IN PRE-SET POSITION

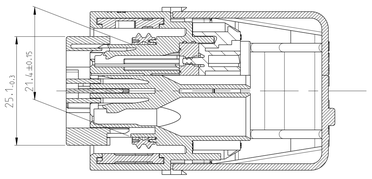

TPA IN SET POSITION
VIEW WITH TERMINALS

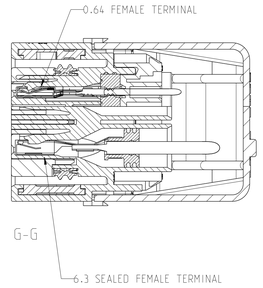

3D VIEW

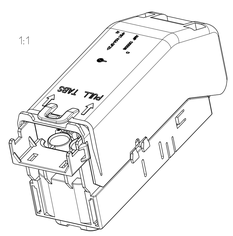

1. Siehe Tabelle Seite 2 und 3
SEE TABLE SHEET 2 AND 3

2. SEE PAGE 2
Siehe Blatt 2

3. SPACER IN PRESET POSITION
Spacer in Vorrastsstellung

4. WARPAGE ALLOWED DOWN TO 35.7
Verzug bis 35.7 zulaessig

5. Signal Kontakte sind ausgelegt fuer Kabelgroessen AWG 18-20. Leiterquerschnitt 0.5 - 0.75mm.
Fuer die Dichtigkeit der Steckverbinder ist notwendig, dass der Isolationsdurchmesser 1.4 - 1.9mm betraegt.
SIGNAL CONTACTS ARE SUITABLE FOR WIRE SIZE AWG 18-20. CONDUCTOR CROSS SECTION 0.5 - 0.75mm.
FOR THE SEALING OF THE CONNECTOR IT IS NECESSARY TO HAVE A CABLE ISOLATION DIAMETER OF 1.4 - 1.9mm.

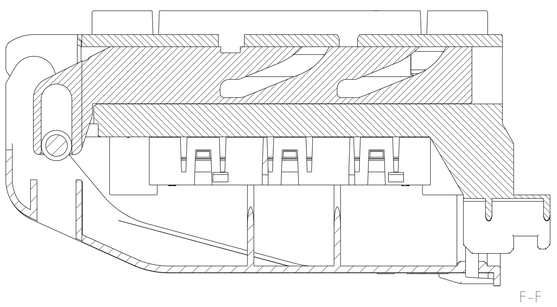

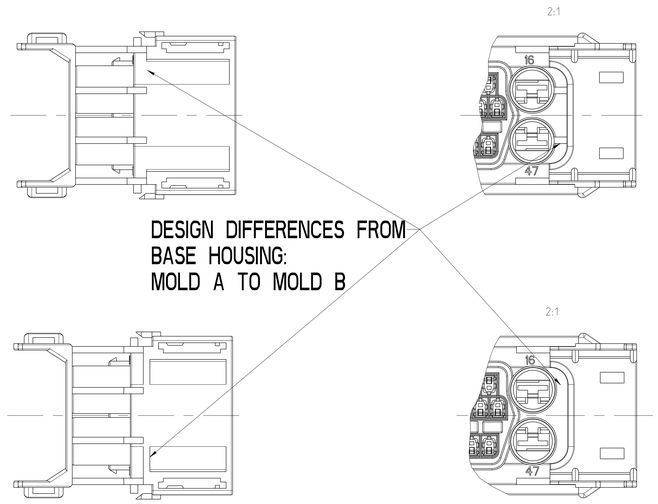

DESIGN DIFFERENCES FROM
BASE HOUSING:
MOLD A TO MOLD B

CUSTOMER PN	TE- PN	TE- PN		DESCRIPTION	
2L1T-14A464-AB-XXX (1)	X-2291024-X (1)	X-1355512-X (1)	1x	FAMILY SEALING	8
			1x	PERIPHERAL SEAL	7
			1x	WIRE DRESS COVER	6
			1x	COVER FAM.-SEAL	5
			1x	RIGHT SLIDE	4
			1x	LEFT SLIDE	3
			1x	SPACER	2
			1x	HOUSING	1

THIS DRAWING IS A CONTROLLED DOCUMENT.

DIMENSIONS: mm

TOLERANCES UNLESS OTHERWISE SPECIFIED:
0 PLC ±0.4
1 PLC ±0.4
2 PLC ±0.4
3 PLC ±0.4
4 PLC ±0.4
ANGLES ±5°

MATERIAL -
FINISH -

DWN R. JAKLIN 19MAY99
CHK G. MUMPER 19MAY99
APVD H. BOUDA 19MAY99

PRODUCT SPEC -
APPLICATION SPEC -
WEIGHT -

TE Connectivity

NAME ASSY 47WAY MK25/60 ABS CONNECTOR

SIZE A0 | CAGE CODE 00779 | DRAWING NO C-1355512 | RESTRICTED TO -

Customer Drawing | SCALE 2:1 | SHEET 1 OF 3 | REV N7

4806 (3/11)

THIS DRAWING IS UNPUBLISHED. RELEASED FOR PUBLICATION 2005
© COPYRIGHT 2005 Tyco Electronics AMP GmbH ALL RIGHTS RESERVED.

LOC	DIST	REVISIONS					
AI	-	P	LTR	DESCRIPTION	DATE	DWN	APVD
			-	SEE SHEET 1	-	-	-

1	2	3	4	5	6	7	8	9	10	11	12	13	14	15	16	17	18	19	20	21	22	23	24	25	26	27	28	29	30	31	32	33	34	35	36	37	38	39	40	41	42	43	44	45	46	47	Bemerkung NOTE	Benutzt von USED AT	Markierung auf der Kappe fuer Familiendichtung} MARKING ON COVER FOR FAMILY SEAL}	FORD PN	TE- PN	REV	
o	2	3	4	5	6	7		9		11			14	15	o	17	18	19	20	21	22	23	24	25	26	27	28	29	30	31	o			35			38		40	41			44			o		NISSAN	098		9-1355512-8	A	
o	2		4	5		7		9		11			14	15	o	17	18	19	20	21	22	23	24	25	26	27	28	29	30	31	o			35			38	39	40	41			44			o		YAZAKI	097		9-1355512-7	A	
o		3	4	5	6	7		9	10	11			14	15	o	17	18	19	20	21	22	23	24	25	26	27	28	29	30	31	o			35			38	39	40	41			44			o		MAHINDRA CARS	096		9-1355512-6	B	
o	2	3	4	5	6	7		9	10	11			14	15	o	17			20	21	22	23	24	25	26	27	28	29	30	31	o			35			38	39	40	41			44			o		FORD	△2 095	2L1T-14A464-AB-095	9-1355512-5	B	
																																																NOT USED	094				
o	2	3	4	5	6	7		9	10	11			14	15	o	17	18	19	20	21	22	23	24	25	26	27	28	29	30	31	o			35			38	39	40	41			44			o		FORD	△2 093	2L1T-14A464-AB-093	9-1355512-3	N	N6
																																																NOT USED	092				
o	2	3		5	6	7			10	11			14	15	o	17	18	19	20	21	22	23	24	25	26	27	28	29	30	31	o			35			38	39	40	41			44			o		FORD	△2 091		9-1355512-1	B	
																																																NOT USED	△2 090				
																																																NOT USED	△2 089				
																																																NOT USED	△2 088				
																																																NOT USED	087				
o	2	3	4	5	6	7		9	10	11			14	15	o	17			20	21		23	24	25	26	27	28		30	31	o			35			38	39	40	41			44			o		FORD	△2 086		8-1355512-6	B	
																																																NOT USED	△2 085				
																																																NOT USED	△2 084				
																																																NOT USED	△2 083				
																																																NOT USED	082				
o	2	3	4	5	6	7		9	10	11			14		o	17			20	21		23	24	25	26	27	28		30	31	o			35			38		40	41			44			o		MAZDA	△2 081		8-1355512-1	B	
																																																NOT USED	△2 080				
																																																NOT USED	△2 079				
																																																NOT USED	△2 078				
																																																NOT USED	△2 077				
																																																NOT USED	△2 076				
																																																NOT USED	△2 075				
																																																NOT USED	△2 074				
																																																NOT USED	△2 073				
																																																NOT USED	△2 072				
																																																NOT USED	△2 071				
																																																NOT USED	△2 070				
																																																NOT USED	△2 069				
																																																NOT USED	068				
o	2	3							10	11				15	o				20					25	26	27	28		30		o						38						44			o		LEAR	△2 067	2L1T-14A464-AB-067	6-1355512-7	B	
																																																NOT USED	△2 066				
																																																NOT USED	△2 065				
																																																NOT USED	△2 064				
																																																NOT USED	△2 063				
																																																NOT USED	△2 062				
																																																NOT USED	△2 061				
																																																NOT USED	△2 060				
																																																NOT USED	△2 059				
																																																NOT USED	△2 058				
																																																NOT USED	△2 057				
																																																NOT USED	△2 056				
																																																NOT USED	△2 055				
																																																NOT USED	△2 054				
																																																NOT USED	053				
o	2	3							10	11				15	o				20					25			28		30		o												44			o		LEAR	052	2L1T-14A464-AB-052	5-1355512-2	B	
o	2	3	4	5				9	10	11				15	o	17	18	19	20	21	22	23	24	25	26	27	28	29	30	31	o			35			38		40	41	42	43	44			o		LEAR	△2 051	2L1T-14A464-AB-051	5-1355512-1	B	
																																																NOT USED	△2 050				
																																																NOT USED	△2 049				
																																																NOT USED	△2 048				
																																																NOT USED	△2 047				
																																																NOT USED	△2 046				
																																																NOT USED	△2 045				
																																																NOT USED	△2 044				
																																																NOT USED	△2 043				
																																																NOT USED	△2 042				
																																																NOT USED	△2 041				
																																																NOT USED	△2 040				
																																																NOT USED	039				
o							8	9	10	11	12	13	14	15	o	17				21	22	23	24		26	27	28		30	31	o						38	39	40							o		LEAR	038	2L1T-14A464-AB-038	3-1355512-8	C	
o		3		5	6	7	8	9	10	11	12		14	15	o	17	18	19	20	21	22	23	24	25	26	27	28	29	30	31	o			35			38	39	40							o		LEAR	△2 037	2L1T-14A464-AB-037	3-1355512-7	C	
																																																NOT USED	△2 036				
																																																NOT USED	△2 035				
																																																NOT USED	△2 034				
																																																NOT USED	033				
o		3		5	6	7	8		10		12				o	17	18	19	20	21	22	23	24	25	26	27	28	29	30	31	o						38	39								o		AMGeneral	△2 032	2L1T-14A464-AB-032	3-1355512-2	H	
																																																NOT USED	031				N7
~~o~~	~~2~~								~~10~~		~~12~~	~~13~~	~~14~~		~~o~~					~~21~~	~~22~~	~~23~~									~~o~~			~~35~~				~~39~~		~~41~~			~~44~~			~~o~~		~~JAGUAR~~	~~△2 030~~	~~2L1T-14A464-AB-030~~	~~3-1355512-0~~	~~F~~	OBSOLETE
																																																NOT USED	△2 029				
																																																NOT USED	△2 028				
																																																NOT USED	027				
o							8	9	10		12	13	14		o	17				21	22	23	24		26	27	28		30	31	o			35				39	40				44			o	DSC	Mazda Demio	026	2L1T-14A464-AB-026	2-1355512-6	H	
o		3		5	6	7	8		10		12		14		o	17	18	19	20	21	22	23	24	25	26	27	28	29	30	31	o							39								o		AMGeneral	△2 025	2L1T-14A464-AB-025	2-1355512-5	H	
																																																NOT USED	△2 024				
																																																NOT USED	023				
o		3		5	6	7	8	9	10	11	12		14	15	o	17	18	19	20	21	22	23	24	25	26	27	28	29	30	31	o			35			38		40							o		LEAR	022	2L1T-14A464-AB-022	2-1355512-2	H	N7
~~o~~							~~8~~	~~9~~	~~10~~	~~11~~		~~13~~		~~15~~	~~o~~	~~17~~				~~21~~	~~22~~	~~23~~	~~24~~		~~26~~	~~27~~	~~28~~		~~30~~	~~31~~	~~o~~								~~40~~							~~o~~		~~LEAR~~	~~021~~	~~2L1T-14A464-AB-021~~	~~2-1355512-1~~	~~J~~	OBSOLETE
o		3		5	6	7	8	9	10	11				15	o	17	18	19	20	21	22	23	24	25	26	27	28	29	30	31	o								40							o		LEAR	020	2L1T-14A464-AB-020	2-1355512-0	J	
o									10						o					21	22	23									o			35				39		41			44			o		YAZAKI	019	2L1T-14A464-AB-019	1-1355512-9	H	
o		3		5	6	7	8	9	10	11				15	o	17	18	19	20	21	22	23	24	25	26	27	28	29	30	31	o			35				39	40				44			o		SIEMENS US	018	2L1T-14A464-AB-018	1-1355512-8	J	
o		3		5	6	7			10	11		13		15	o	17	18	19	20	21	22	23	24	25	26	27	28	29	30	31	o			35			38	39			42	43				o	ABS	YAZAKI	△2 017	2L1T-14A464-AB-017	1-1355512-7	J	
																																																NOT USED	△2 016				
																																																NOT USED	015				
o			4				8	9	10			13			o	17	18	19	20	21	22	23	24	25	26	27	28	29	30	31	o		34	35	36		38	39	40	41	42	43		45		o	ABS	YAZAKI	014	2L1T-14A464-AB-014	1-1355512-4	J	
o		3		5	6	7	8	9	10	11		13		15	o	17	18	19	20	21	22	23	24	25	26	27	28	29	30	31	o			35			38		40							o	ABS	LEAR	013	2L1T-14A464-AB-013	1-1355512-3	K	N7
~~o~~		~~3~~		~~5~~	~~6~~	~~7~~	~~8~~	~~9~~	~~10~~	~~11~~				~~15~~	~~o~~	~~17~~	~~18~~	~~19~~	~~20~~	~~21~~	~~22~~	~~23~~	~~24~~	~~25~~	~~26~~	~~27~~	~~28~~	~~29~~	~~30~~	~~31~~	~~o~~			~~35~~			~~38~~		~~40~~							~~o~~	~~ABS~~	~~LEAR~~	~~012~~	~~2L1T-14A464-AB-012~~	~~1-1355512-2~~	~~K~~	OBSOLETE
~~o~~							~~8~~	~~9~~	~~10~~	~~11~~				~~15~~	~~o~~	~~17~~				~~21~~	~~22~~	~~23~~	~~24~~		~~26~~	~~27~~	~~28~~		~~30~~	~~31~~	~~o~~			~~35~~					~~40~~							~~o~~	~~ABS~~	~~LEAR~~	~~011~~	~~2L1T-14A464-AB-011~~	~~1-1355512-1~~	~~K~~	OBSOLETE
o									10						o					21	22	23									o							39								o		YAZAKI	△2 010	2L1T-14A464-AB-010	1-1355512-0	H	
																																																NOT USED	009				
o		3		5	6	7	8	9	10		12	13	14		o	17	18	19	20	21	22	23	24	25	26	27	28	29	30	31	o			35			38	39	40				44			o	ABS, ESP	Siemens	008	2L1T-14A464-AB-008	0-1355512-8	L	
o								9	10		12	13	14		o	17				21	22	23	24		26	27	28		30	31	o			35				39	40				44			o	ABS, ESP	Siemens	007	2L1T-14A464-AB-007	0-1355512-7	L	
o		3		5	6	7	8	9	10	11				15	o	17	18	19	20	21	22	23	24	25	26	27	28	29	30	31	o			35					40							o	ABS+TCS	LEAR	006	2L1T-14A464-AB-006	0-1355512-6	L	
o		3		5	6	7	8	9	10	11	12	13	14	15	o	17	18	19	20	21	22	23	24	25	26	27	28	29	30	31	o			35			38		40							o	ABS	LEAR	005	2L1T-14A464-AB-005	0-1355512-5	L	
																																																NOT USED	△2 004				
																																																NOT USED	△2 003				
o															o																o															o	Alle Pins ausgestanzt ALL PINS REMOVED		002	2L1T-14A464-AB-002	0-1355512-2	N	

Nummerierte Felder kennzeichnen geschlossene Kammern
NUMBERED CAVTIES - INDICATE PLUGGED HOLE LOCATIONS

Leere Felder kennzeichnen geoeffnete Kammern
BLANK CAVITIES - INDICATE OPEN HOLE LOCATIONS

Mit - o - gekennzeichnete Felder sind immer offen
CAVITIES NUMBERED - o - INDICATES ALWAYS OPEN

△2 PINOUT CONFIGURATIONS SHOWN AS "NOT USED" WERE RAISED FOR THE CONNECTOR FORD/JAGUAR PN 2R8T-14A464-KB-XXX (TE PN X-1355628-X) OR VOLVO PN 86456XX (TE PN X-1355956-X)

THIS DRAWING IS A CONTROLLED DOCUMENT.

DWN	R. JAKLIN 19MAY99
CHK	G. MUMPER 19MAY99
APVD	H. BOUDA 19MAY99
DIMENSIONS:	mm
TOLERANCES UNLESS OTHERWISE SPECIFIED:	0 PLC ±0.4, 1 PLC ±0.4, 2 PLC ±0.4, 3 PLC ±0.4, 4 PLC ±0.4, ANGLES ±5°
MATERIAL	-
FINISH	-
PRODUCT SPEC	-
APPLICATION SPEC	-
WEIGHT	-
NAME	ASSY 47WAY MK25/60 ABS CONNECTOR -
SIZE	A0
CAGE CODE	00779
DRAWING NO	C-1355512
RESTRICTED TO	-
SCALE	2:1
SHEET	2 OF 3
REV	N7

TE Connectivity

Customer Drawing

THIS DRAWING IS UNPUBLISHED. RELEASED FOR PUBLICATION 2015
© COPYRIGHT 2015 Tyco Electronics AMP GmbH ALL RIGHTS RESERVED.

LOC	DIST
AI	-

REVISIONS

P	LTR	DESCRIPTION	DATE	DWN	APVD
	-	SEE SHEET 1	-	-	-

o	2	3	4	5	6	7		9	10	11				15	o	17	18	19	20	21	22	23	24	25	26	27	28	29	30	31	o			35			38	39	40	41			44			o	-	-	103	-	0-2291024-3	A
o	2	3	4	5	6	7		9		11			14	15	o	17			20	21	22	23	24	25	26	27	28	29	30	31	o			35			38	39	40	41			44		46	o		-	102		0-2291024-2	A
o	2	3	4	5	6	7		9	10	11	12	13	14	15	o	17	18	19	20	21	22	23	24	25	26	27	28	29	30	31	o			35			38	39	40	41			44			o		Daimler Trucks NA	△2 101	-	0-2291024-1	A
1	2	3	4	5	6	7	8	9	10	11	12	13	14	15	16	17	18	19	20	21	22	23	24	25	26	27	28	29	30	31	32	33	34	35	36	37	38	39	40	41	42	43	44	45	46	47	Bemerkung NOTE	Benutzt von USED AT	MARKING ON COVER FOR FAMILY SEAL	CUSTOMER PN:	TE- PN	REV

Nummerierte Felder kennzeichnen geschlossene Kammern
NUMBERED CAVTIES - INDICATE PLUGGED HOLE LOCATIONS

Leere Felder kennzeichnen geoeffnete Kammern
BLANK CAVITIES - INDICATE OPEN HOLE LOCATIONS

Mit - o - gekennzeichnete Felder sind immer offen
CAVITIES NUMBERED - o - INDICATES ALWAYS OPEN

THIS DRAWING IS A CONTROLLED DOCUMENT.

DIMENSIONS: mm

TOLERANCES UNLESS OTHERWISE SPECIFIED:
0 PLC ±-
1 PLC ±-
2 PLC ±-
3 PLC ±-
4 PLC ±-
ANGLES ±1°

MATERIAL -
FINISH -

DWN M. TRAJKOV 24FEB2015
CHK H. RIPPER 24FEB2015
APVD - -
PRODUCT SPEC -
APPLICATION SPEC -
WEIGHT -

TE Connectivity

NAME
ASSY 47WAY MK25/60
ABS CONNECTOR
-

SIZE	CAGE CODE	DRAWING NO	RESTRICTED TO
A0	00779	C-1355512	-

Customer Drawing

SCALE 2:1 SHEET 3 OF 3 REV N7

4806 (3/11)