THIS DRAWING IS UNPUBLISHED. RELEASED FOR PUBLICATION 1997
© COPYRIGHT 1997 BY - ALL RIGHTS RESERVED.

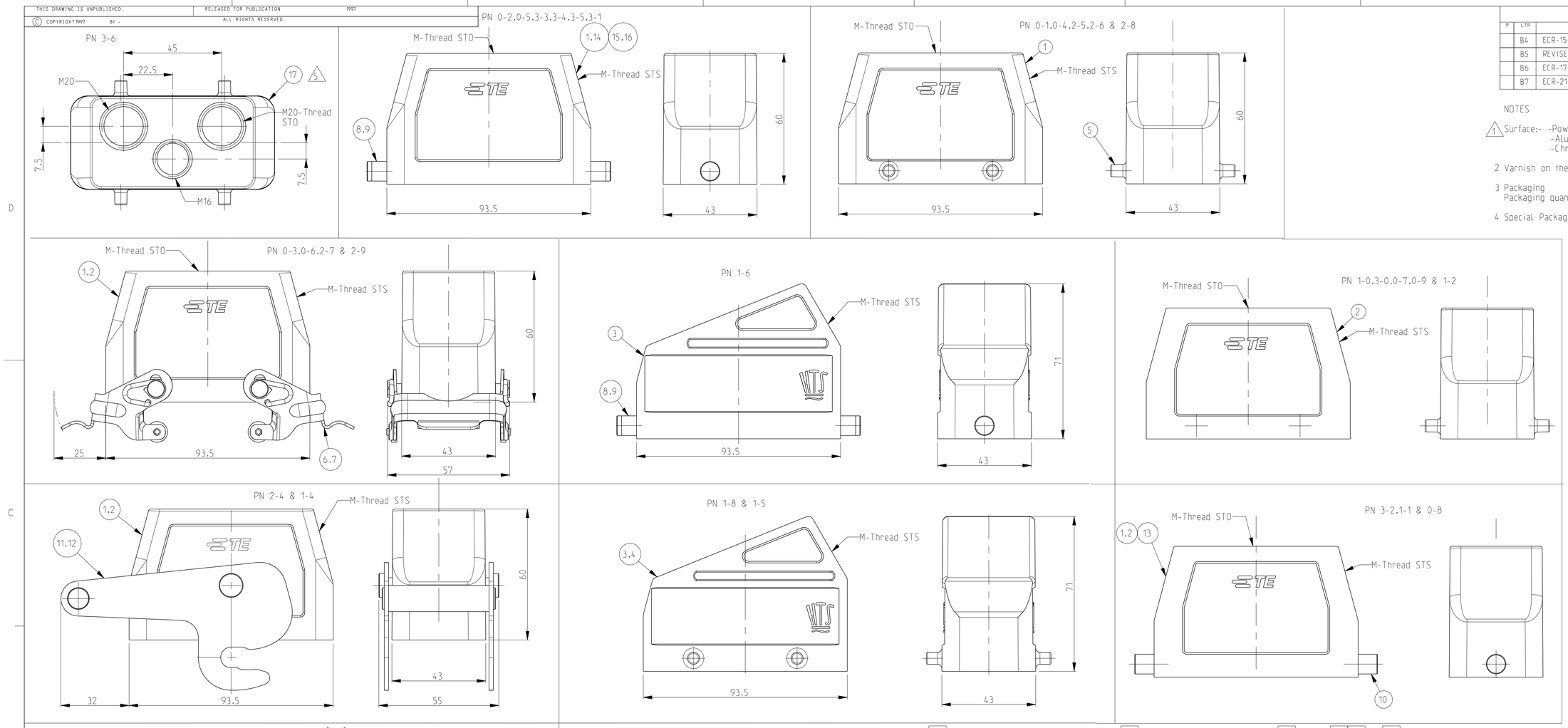

REVISIONS					
P	LTR	DESCRIPTION	DATE	DWN	APVD
	B4	ECR-15-016632	28NOV2016	GCM	MKO
	B5	REVISED PER ECR-16-016780	22AUG2017	NG	MKO
	B6	ECR-17-014013	26MAR18	SG	MKO
	B7	ECR-21-123564	15JUL2022	RK	JB

NOTES

1 Surface:- -Powder varnish grey
-Aluminium oxide+-Varnish black
-Chromital TCP passivation+varnish black

2 Varnish on the inside not necessary

3 Packaging
Packaging quantity 5 piece in a box

4 Special Packaging

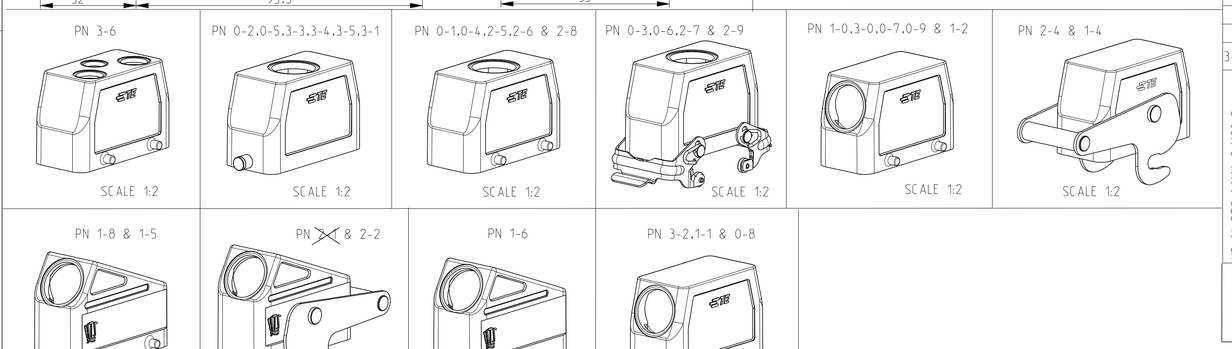

3-6	3-5	3-4	3-3	3-2	0-9	2-9	3-1	2-8	2-7	2-6	1-6	3-0	2-5	2-1	2-2	1-8	1-5	1-4	2-4	1-1	0-5	0-8	0-2	0-6	1-2	0-3	1-0	0-4	0-7	0-1	DESCRIPTION	MATERIAL	SURFACE	COLOR	ITEM NO	NOTES
1																															HB Hood	Aluminium		Grey	17	5
	1																														HB-EMV Hood	Aluminium	SEE NOTE 1	Black	16	
		1																													HB Hood	Aluminium		Grey	15	
			1																												HB Hood	Aluminium		Fire red, RAL 3000	14	
				1																											HB-EMV Hood	Aluminium	SEE NOTE 1	With out varnish	13	
					1																										ZB-Clip bolt	Stainless steel	Blank		12	
														1				1													ZB-Clip bolt	Steel	Zinc plated	Blue	11	
															1				1												LB-Clip bolt	Stainless steel	Blank		10	
					2															2		2									LB-Clip bolt	Steel	Zinc plated	Blue	9	
		2	2	2			2				2										2		2								LB-Clip bolt	Steel	Zinc plated	Blue	8	
		2	2	2			2				2										2		2								LB-Side clip	Steel	Zinc plated	Blue	7	
						2																									VS-Locking Clip	Stainless steel	Blank		6	
									2															2		2					VS-Locking Clip	Steel	Zinc plated	Blue	5	
																															VS-Clip bolt	Stainless steel	Blank		4	
														1			1														HB-K Hood	Aluminium	Aluminium oxide	Black	3	
											1				1		1														HB Hood	Aluminium		Grey	2	
					1	1						1						1		1		1			1		1		1		HB-K Hood	Aluminium	Aluminium oxide	Black	1	
							1	1	1	1			1						1		1		1	1		1		1		1	HB Hood	Aluminium		Grey	1	
OBSOLETE	OBSOLETE	OBSOLETE	OBSOLETE		OBSOLETE						OBSOLETE			OBSOLETE				OBSOLETE				OBSOLETE			OBSOLETE	OBSOLETE		OBSOLETE							
HB-16.STO.1.M16.2.M20.G	HB-EMV.16.STS-GR.1.M32.G	HB-16.STS-GR.1.M25.G	HB-16.STS-GR.1.M32.G.rot	HB-EMV.16.STS-GR.1.M32.G	HB-K.16.STO-VS.1.M32.G	HB.16.STS-VS.1.M32.G.KM	HB.16.STS-GR.1.M32.G.KM	HB.16.STS.1.M32.G.KM	HB.16.STO-VS.1.M32.G.KM	HB.16.STO.1.M32.G.KM	HB-KF.16.STS-GR.1.M32.G	HB-K.16.STO.1.M25.G	HB.16.STS.1.M25.G	HB-K/KF.2.16.STS-ZB.1.M32.G	HB-K/KF.2.16.STS-ZB.1.M32.G	HB-K/KF.16.STS.1.M32.G	HB-KF.16.STS.1.M32.G	HB-K/Z.16.STS-ZB.1.M32.G	HB-Z.16.STS-ZB.1.M32.G	HB-K.16.STS-GR.1.M32.G	HB.16.STS-GR.1.M32.G	HB-K.16.STO-GR.1.M32.G	HB.16.STO-GR.1.M32.G	HB.16.STS-VS.1.M32.G	HB-K.16.STS-VS.1.M32.G	HB-K.16.STS.1.M32.G	HB-K.16.STS.1.M32.G	HB.16.STS.1.M32.G	HB-K.16.STO.1.M32.G	HB.16.STO.1.M32.G	ORDERING TEXT					

THIS DRAWING IS A CONTROLLED DOCUMENT.

DIMENSIONS: mm

TOLERANCES UNLESS OTHERWISE SPECIFIED: +/-ISO 2768-mK +/-ISO 9409-1C0
0 PLC ±
1 PLC ±
2 PLC ±
3 PLC ±
4 PLC ±
ANGLES ±

MATERIAL

FINISH

DWN Schneider 16.01.2002
CHK Schweiger 16.01.2002
APVD -

TE Connectivity

NAME Hood HB.16.M32.G -

PRODUCT SPEC 108-74001 108-74003
APPLICATION SPEC 114-74001 114-74004
WEIGHT

SIZE A1 | CAGE CODE 00779 | DRAWING NO C-1106449 | RESTRICTED TO

CUSTOMER DRAWING | SCALE 5:1 | SHEET 1 OF 1 | REV B7

4805 (3/13)