THIS DRAWING IS UNPUBLISHED. RELEASED FOR PUBLICATION 2015
© COPYRIGHT 1991 BY TE CONNECTIVITY ALL RIGHTS RESERVED.

LOC	DIST

REVISIONS

P	LTR	DESCRIPTION	DATE	DWN	APVD
	B	REVISED PER ECO-16-015336	21MAR2016	SH	DM

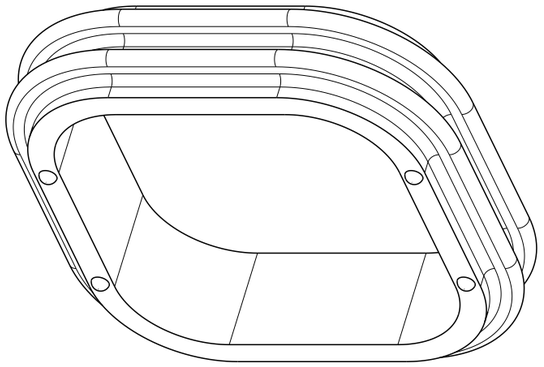

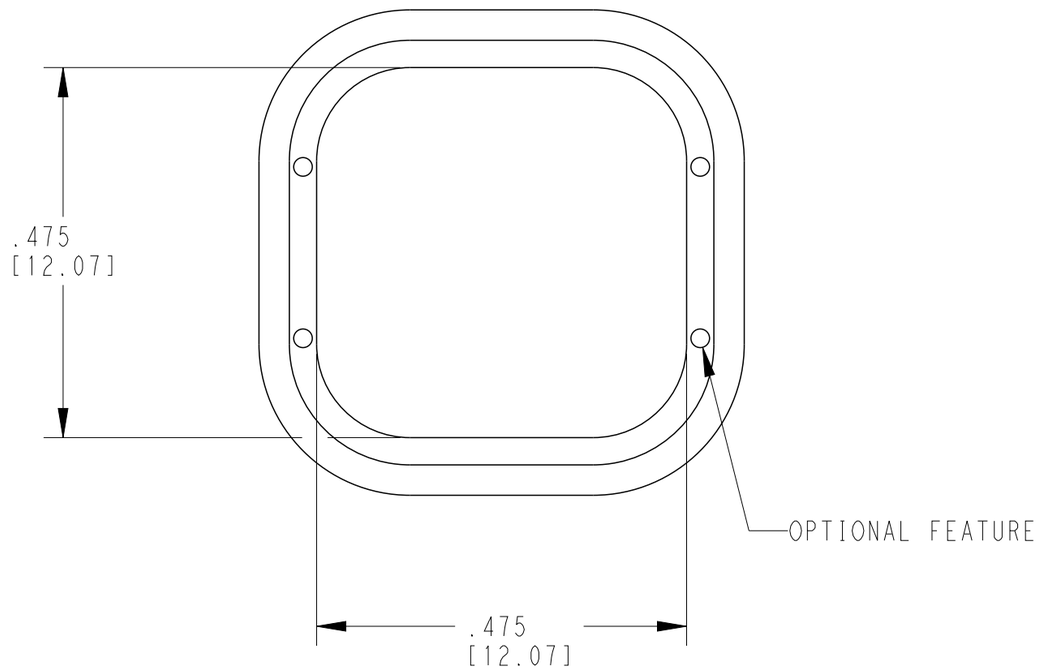

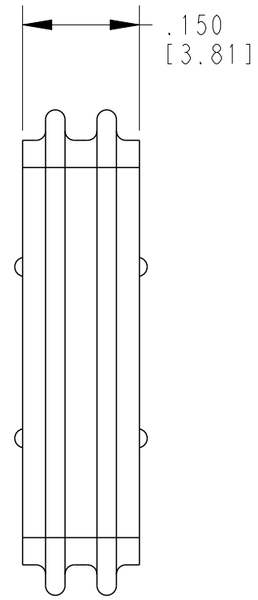

TE INTERNAL PN	DEUTSCH PN
1010-017-0606	1010-017-0606

1 MATERIAL: SILICONE (RED-ORANGE)

NOTES: UNLESS OTHERWISE SPECIFIED

THIS DRAWING IS A CONTROLLED DOCUMENT.

DIMENSIONS: INCHES[mm]

TOLERANCES UNLESS OTHERWISE SPECIFIED:
0 PLC ±
1 PLC ±
2 PLC ±
3 PLC ±.025 [0.64]
4 PLC ±
ANGLES ±0°30'0"

MATERIAL 1

FINISH

DWN V.TOMSA 01NOV1991
CHK C.BUNKE 02JUN1992
APVD J. ALBERS 04JUN1992
PRODUCT SPEC N/A
APPLICATION SPEC N/A
WEIGHT 0.64 g

TE Connectivity

NAME SEAL, FRONT,STANDARD TYPE
6 CONTACT PLUG
DT SERIES

SIZE	CAGE CODE	DRAWING NO	RESTRICTED TO
A3	4AFU8	C-1010-017-0606	-

Customer Drawing

SCALE 5:1 SHEET 1 OF 1 REV B

1470-19 (3/11)