| DRAWING NUMBER | | BS 308 THIRD ANGLE PROJECTION |
|---|---|---|
| 603568–ENV | A3 | |

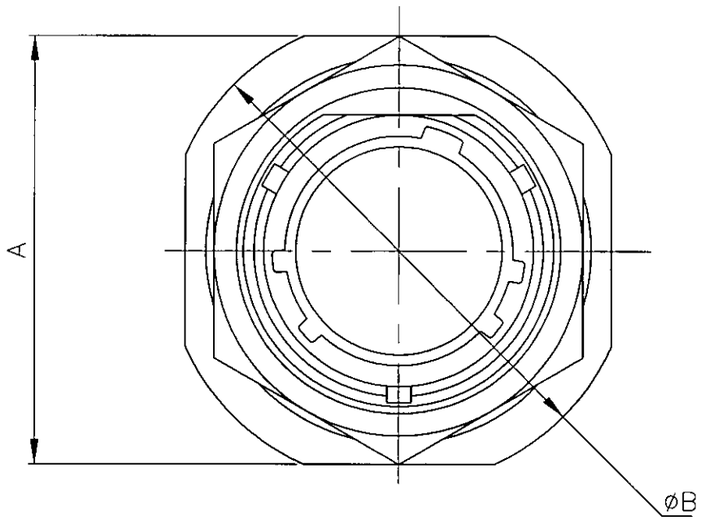


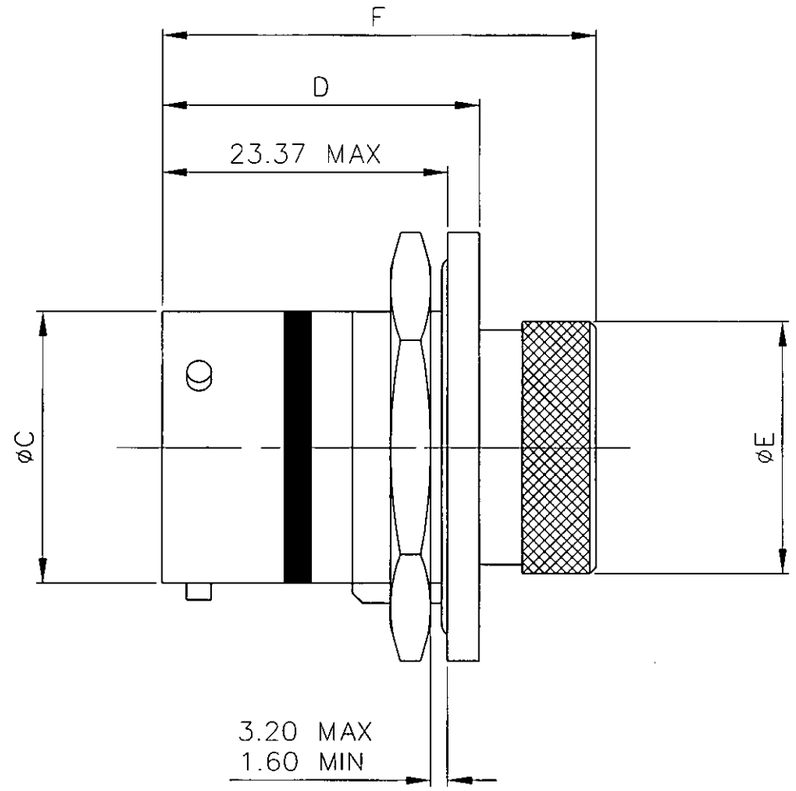


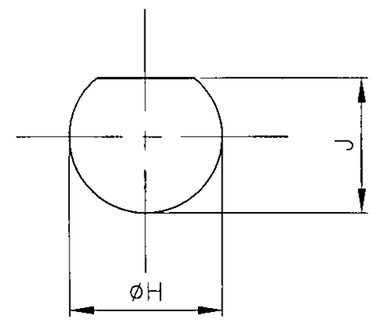


PANEL CUT OUT

| SHELL SIZE | A MAX | øB MAX | øC MAX | D MAX | øE MAX | F MAX | øH ±0.10 | J ±0.2 |
|---|---|---|---|---|---|---|---|---|
| 8 | 23.95 | 27.20 | 11.94 | 26.05 | 11.23 | 35.65 | 14.53 | 13.62 |
| 10 | 27.15 | 30.40 | 14.94 | 26.05 | 14.25 | 35.65 | 17.70 | 16.79 |
| 12 | 31.95 | 35.20 | 18.99 | 26.05 | 17.42 | 35.65 | 22.50 | 21.00 |
| 14 | 35.05 | 38.30 | 22.16 | 26.05 | 20.58 | 35.65 | 25.70 | 24.08 |
| 16 | 38.25 | 40.90 | 25.34 | 26.05 | 23.75 | 35.65 | 28.83 | 27.23 |
| 18 | 41.45 | 44.70 | 28.51 | 26.85 | 26.92 | 36.45 | 32.01 | 30.41 |
| 20 | 46.15 | 49.50 | 31.69 | 26.85 | 30.09 | 36.45 | 35.18 | 33.58 |
| 22 | 49.35 | 52.60 | 34.86 | 26.85 | 33.27 | 36.45 | 38.36 | 36.95 |
| 24 | 52.55 | 55.80 | 38.04 | 26.85 | 36.44 | 36.45 | 41.53 | 39.93 |

NOTES :–

1. ALL DIMENSIONS ARE FOR REFERENCE ONLY.
2. TOLERANCE ON ALL DIMENSIONS ±0.20 UNLESS OTHERWISE STATED.

| ISSUE | CHANGE NOTE | DRAWN | CHECKED | APP. ENG. | APP. B.U. | DATE |
|---|---|---|---|---|---|---|
| A | 043861 | JRE | | | | 18/11/03 |

MATERIAL

HEAT TREATMENT & FINISH

APP. I.E.D.

© THE COPYRIGHT OF THIS DRAWING IS RESERVED BY DEUTSCH LTD. IT IS ISSUED ON CONDITION THAT IT IS NOT COPIED, REPRODUCED OR DISCLOSED TO A THIRD PARTY EITHER WHOLLY OR IN PART WITHOUT THE CONSENT IN WRITING OF DEUTSCH LTD.

SCALE NTS

GENERAL TOLERANCES UNLESS OTHERWISE STATED.
±0.4mm ON WHOLE NUMBERS
±0.2mm ON ONE PLACE DECIMALS
±0.1mm ON TWO PLACE DECIMALS
±1/2° ON ANGLES
±0.05mm ON DRILLED HOLES
ALL DIAMETERS ⌀0.10
REMOVE ALL BURRS AND SHARP EDGES 0.1 MAX. UNLESS OTHERWISE STATED.

DIMS. IN MILLIMETRES

DEUTSCH LTD
ST LEONARDS–ON–SEA, EAST SUSSEX, TN38 9RF, TEL:(01424)852721

TITLE JAM NUT RECEPTACLE AS TYPE 7

DRAWING NUMBER 603568–ENV