THIS DRAWING IS UNPUBLISHED. RELEASED FOR PUBLICATION -.- .
© COPYRIGHT - By - ALL RIGHTS RESERVED.

NICHT VERMASSTE KANTEN SIND NICHT MAßSTÄBLICH

ÄNDERUNGEN DIE DEM TECHNISCHEN FORTSCHRITT DIENEN, BEHALTEN WIR UNS VOR

REVISIONS

P	LTR	DESCRIPTION	DATE	DWN	APVD
	E	REVISED PER ECR-22-135817	14APR2022	PJ	FL
	E1	REVISED PER ECR-22-154590	20FEB2022	SM	FL

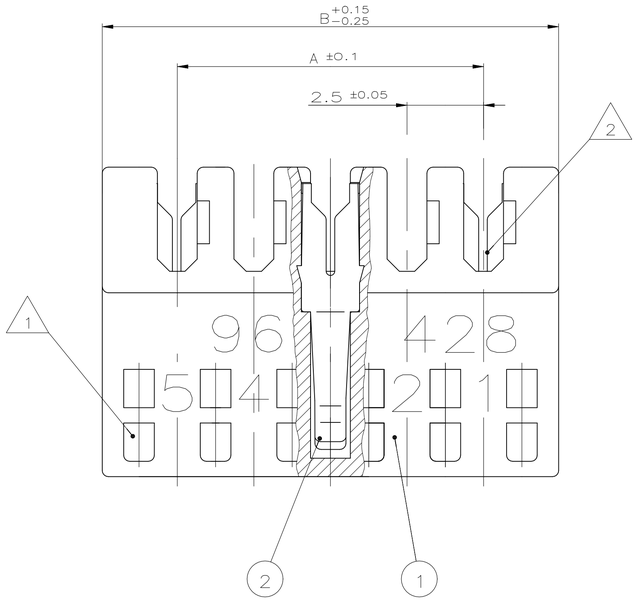

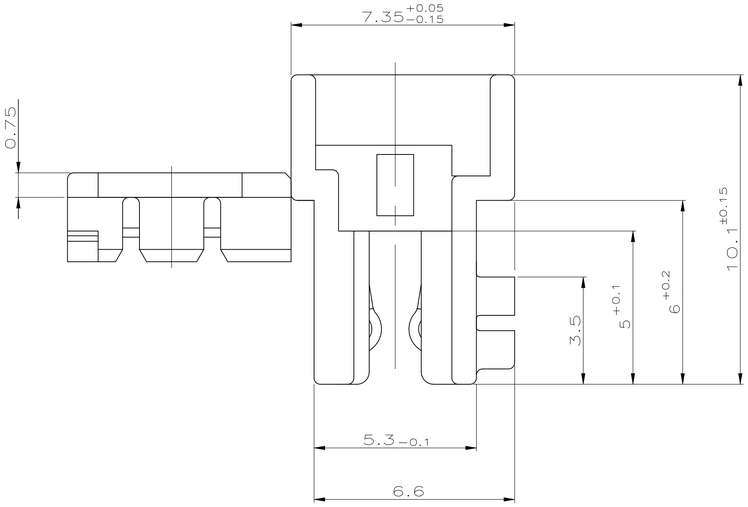

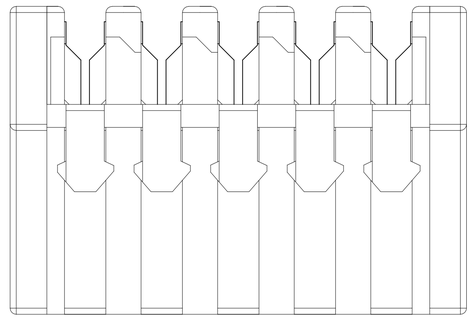

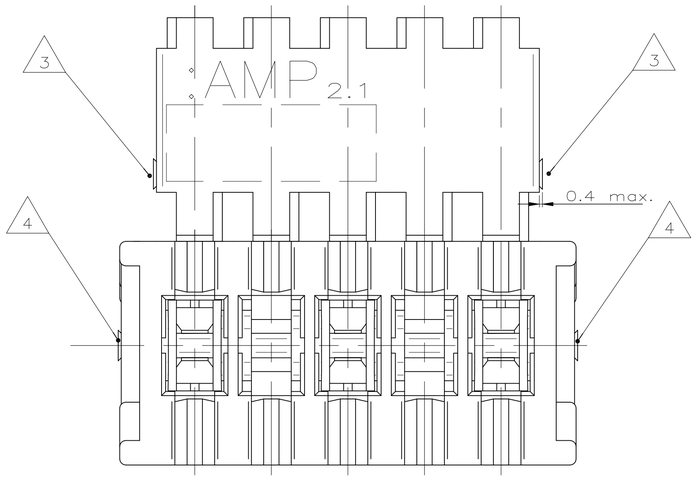

11 PART RELEASED WITH PARTIAL VALIDATION AND PENDING AGENCY APPROVALS.

10 PRELIMINARY PART NOT YET RELEASED FOR PRODUCTION

9 PA GF, UL94-V0 & GWEPT 750 NO-FLAME, NATURAL

8 PBT GF

7 OBSOLETE PARTS: OBSOLETE CIS STREAMLINING PER D.RENAUD/D.SINISI

6 MATING PARTS:
- TAB HEADER SEE DRAWING NO. 1971921 AND EQUIVALENTS.
- PCB APPLICATION WITH FRAME SEE DRAWING 964 575
- PCB APPLICATION WITHOUT FRAME SEE SPECIFICATION 108-18056

5 X ... CAVITY LOADED WITH CONTACT
O ... CAVITY WITHOUT CONTACT

4 CUTTING AREA FROM PRODUCING PROCESS

3 -

2 WIRE RANGE DGB II (7x⌀0.25=0.35mm²)
SEE APPLICATION SPECIFICATION 114-18049-1

1 KEYING RIBS; CUTTING WITH THE TERMITATION MACHINE POSSIBLE

	20	19	18	17	16	15	14	13	12	11	10	9	8	7	6	5	4	3	2	1	POS.	DIM A	DIM B	TE P/N 8	TE P/N 9
																					20	47.5	52.4	–	–
OBSOLETE	X	O	X	O	X	O	X	O	X	O	X	O	X	O	X	O	X	O	X	O	19	45.0	49.9	~~1-966 843-9~~	–
																					18	42.5	47.4	–	–
OBSOLETE			X	O	X	O	X	O	X	O	X	O	X	O	X	O	X	O	X	O	17	40.0	44.9	~~1-966 843-7~~	–
																					16	37.5	42.4	–	–
OBSOLETE						X	O	X	O	X	O	X	O	X	O	X	O	X	O	X	15	35.0	39.9	~~1-966 843-5~~	2319801-5 10
																					14	32.5	37.4	–	–
OBSOLETE							X	O	X	O	X	O	X	O	X	O	X	O	X	O	13	30.0	34.9	~~1-966 843-3~~	–
																					12	27.5	32.4	–	–
7 OBSOLETE									X	O	X	O	X	O	X	O	X	O	X	O	11	25.0	29.9	~~1-966 843-1~~	–
																					10	22.5	27.4	–	–
												X	O	X	O	X	O	X	O	X	9	20.0	24.9	1-966 842-9	11 1-2311514-9
																					8	17.5	22.4	–	–
7 OBSOLETE														X	O	X	X	X	X	X	7	15.0	19.9	~~2-966 842-7~~	–
														X	O	X	O	X	O	X	7	15.0	19.9	1-966 842-7	11 2311514-7
															X	O	X	X	O	X	6	12.5	17.4	3-966 842-6	11 2311514-6
7 OBSOLETE															X	X	O	X	O	X	6	12.5	17.4	~~2-966 842-6~~	–
7 OBSOLETE															X	O	X	O	X	X	6	12.5	17.4	~~1-966 842-6~~	–
																X	O	X	O	X	5	10.0	14.9	1-966 842-5	–
																					4	7.5	12.4	–	–
																		X	O	X	3	5.0	9.9	1-966 842-3	11 2-2311514-3

Kammerbestückung (CAVITIES LOADED) 5

ZEICHNUNG GÜLTIG AB .....

BESTELL-NR.	POS.	STÜCK	BENENNUNG EINZELTEIL	WERKSTOFF	OBERFLÄCHE / FARBE
SIEHE TABELLE	2	–	KONTAKT	CuSn	VORVERZINNT
SEE TABLE	1	–	FEDERLEISTENGEHÄUSE	PBTP	NATUR

THIS DRAWING IS A CONTROLLED DOCUMENT.

DIMENSIONS: mm

TOLERANCES UNLESS OTHERWISE SPECIFIED:
0 PLC ± –
1 PLC ± 0.2
2 PLC ± –
3 PLC ± –
4 PLC ± –
ANGLES ± 1°

MATERIAL –

FINISH –

DWN ATZMANN 9.11.95
CHK SCHNAUBELT 9.11.95
APVD –
PRODUCT SPEC –
APPLICATION SPEC 114-18049-1
WEIGHT 0
CUSTOMER DRAWING

TE Connectivity

NAME AMP DUOPLUG 2.5™ FEMALE CONNECTOR 3-20 POSITION, DGBII, SELECTIV LOADED –

SIZE	CAGE CODE	DRAWING NO	RESTRICTED TO
A1	00779	C-966842	–

SCALE 10:1 SHEET 1 OF 1 REV E1

4805 (1/15)