THIS DRAWING IS UNPUBLIDHED. RELEASED FOR PUBLICATION ,1998 .
© COPYRIGHT 1998 BY AMP KOREA. ALL RIGHTS RESERVED.

LOC	DIST
DS	

REVISIONS

P	LTR	DESCRIPTION		DATE	DWN	APVD
	0	RELEASED	FC00-0094-98	03.NOV'98	YM	CS
	A	REVISED	FC00-0062-01	11.JUN'01	YM	CS
	B	REVISED	FC00-0194-04	23.AUG'04	YM	CS

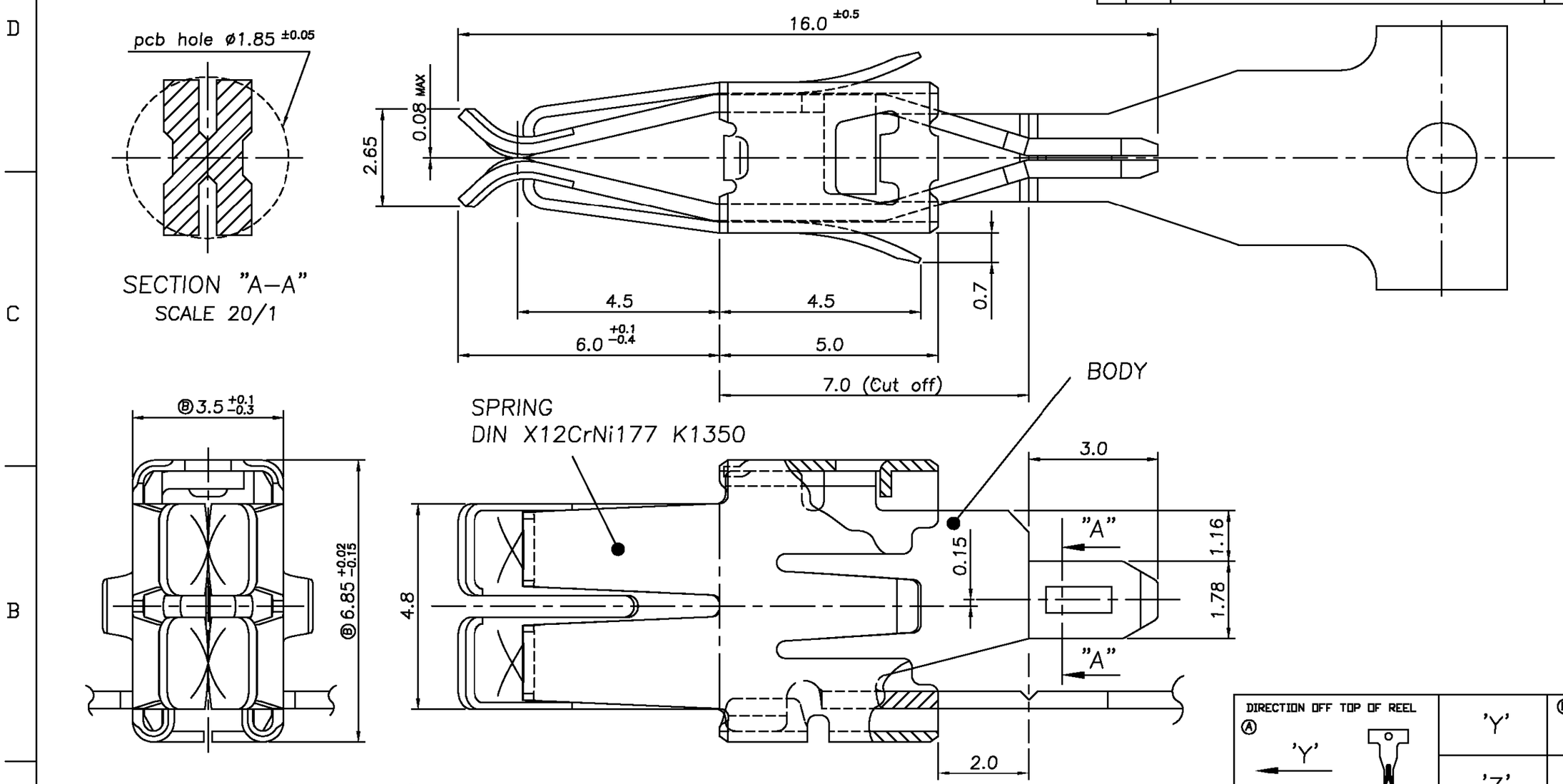

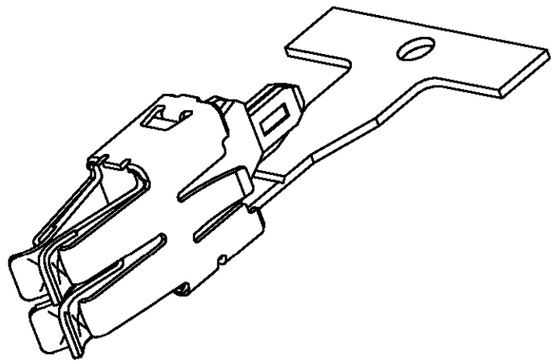

DIRECTION OFF TOP OF REEL Ⓐ	TOP OF REEL	PART NUMBER
'Y'	'Y'	Ⓑ 1-85047 -1
'Z'	'Z'	85047 -1

THIS DRAWING IS CONTROLLED DOCUMENT FOR AMP INCORPORATED. IT IS SUBJECT TO CHANGE AND THE CONTROLLING ENGINEERING ORGANIZATION SHOULD BE CONTACTED FOR THE LATEST REVISION.

DIMENSIONS: MM

TOLERANCES UNLESS OTHERWISE SPECIFIED:
0 <XX<10 ± 0.2
10≤XX<30 ± 0.25
30≤XX<100 ± 0.3
ANGLES ± 3°

MATERIAL Ⓐ CuNiSi Alloy 0.4Thk.

FINISH PRE-TINNED

DWN
CHK
APVD
PRODUCT SPEC Ⓑ 108-61041
APPLICATION SPEC
WEIGHT NET. 1.02gf

AMP KOREA.
kyungsan, korea

NAME
STANDARD POWER TIMER CONTACT
FOR P.C.B - WITH LATCH

SIZE	CAGE CODE	DRAWNING NO
A3	00779	C- 85047

SCALE 10/1 SHEET 1 OF 1 REV B

AMP 1470-19 REV 09MAY94