THIS DRAWING IS UNPUBLISHED. RELEASED FOR PUBLICATION -
© COPYRIGHT 19 ALL RIGHTS RESERVED.

| LOC | DIST |
|---|---|
| DS | - |

REVISIONS

| P | LTR | DESCRIPTION | DATE | DWN | APVD |
|---|---|---|---|---|---|
| | A2 | REVISED (ECR-11-005908) | 22.MAR.'11 | KT | HG |

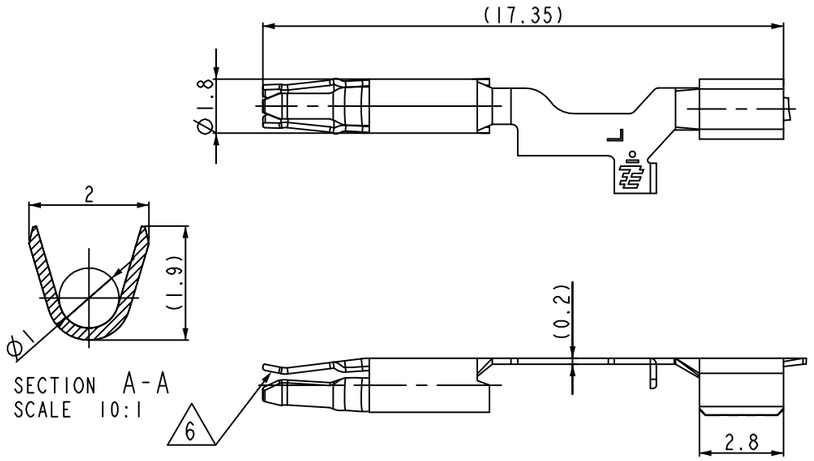


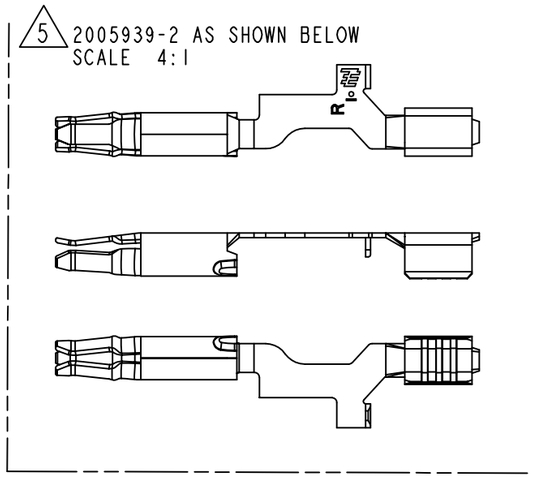


3D VIEW

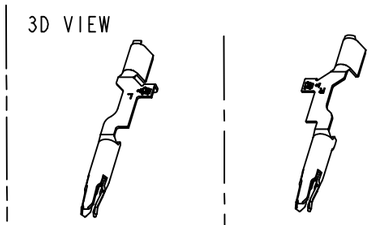

L/P P/N 2005939-1
SCALE 2:1

L/P P/N 2005939-2
SCALE 2:1

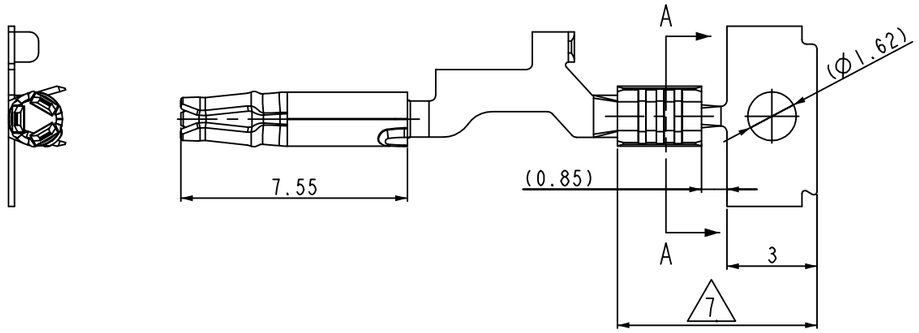


NOTE

1. GENERAL TOLERANCE: ±0.3, ±3°
2. APPLICABLE SQUIB AK-II PLUG HSG P/N: 2005510-X
3. (A2) APPLICABLE WIRE RANGE: 0.3~0.5SQ, INSULATION DIA. MAX Ø1.8
4. SOCKET CONTACT LEFT (2005939-1)'S DRAWING IS SHOWN.
5. SOCKET CONTACT RIGHT (2005939-2) IS MIRRORED COPY OF 2005939-1.
6. GOLD PLATING AREA ON CONTACT SIDE.
7. TIN PLATING AREA ON BOTH SIDES.
8. DIRECTION OFF TOP OF REEL.
9. LEFT & RIGHT SOCKET CONTACTS ARE REELED SUCCESSIVELY.
10. APPLICATOR FEED: 6mm + 6mm.

| DESCRIPTION | P/N | REMARKS |
|---|---|---|
| SOCKET CONTACTS | 2005939-3 | 9 |

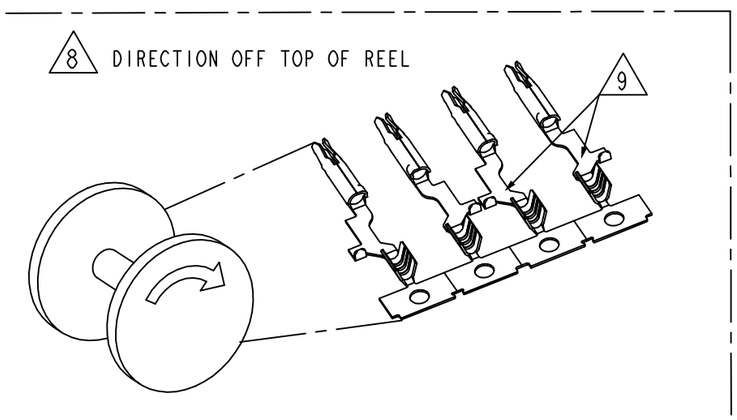


| FINISH | MATERIAL | DESCRIPTION | L/P P/N | QTY |
|---|---|---|---|---|
| 6 7 | COPPER ALLOY | SOCKET CONTACT, RIGHT | 2005939-2 | 1 |
| 6 7 | COPPER ALLOY | SOCKET CONTACT, LEFT | 2005939-1 | 1 |

THIS DRAWING IS A CONTROLLED DOCUMENT.

DIMENSIONS: mm

TOLERANCES UNLESS OTHERWISE SPECIFIED:
0 PLC ±
1 PLC ±
2 PLC ±
3 PLC ±
4 PLC ±
ANGLES ±

MATERIAL -
FINISH -

DWN KT JUNG
CHK KT LIM
APVD HG CHO
PRODUCT SPEC -
APPLICATION SPEC 114-61022
WEIGHT -

TE Connectivity

NAME
1mm DIA. PIN SOCKET CONTACT
FOR SQUIB AK-II CONNECTOR

| SIZE | CAGE CODE | DRAWING NO | RESTRICTED TO |
|---|---|---|---|
| A3 | 00779 | C-2005939 | - |

CUSTOMER DRAWING | SCALE 5:1 | SHEET 1 OF 1 | REV A2